TRACC® Family

Product Description
Assembly Manual

Part No. 620297B

Revised January 2007

TRINITY
HIGHWAY PRODUCTS
ENERGY ABSORPTION SYSTEMS

TRinity Attenuating Crash Cushion

TRACC-Family System Manual

- 2005 Model -

TRACC

FasTRACC ***WideTRACC*** ***ShorTRACC***

A Family of NCHRP Report 350 Crash Cushions

Trinity Highway Products, LLC.
2525 Stemmons Freeway
Dallas, Texas 75207

U.S. Calls: (800)-644-7976
International Calls: (214)-589-8140
Fax (214) 589-8423
E-mail: TRACC.info@trin.net
Internet: www.highwayguardrail.com

Table of Contents

Customer Service 3
- Corporate Contacts 3
- Regional Telephone Contacts 3

TRACC Family Design Information 4
- General Information 4
  - Product Overview 4
  - Maintenance Overview 4
  - Crash Performance 5
- Repair Options 5
- Configuration Options 6
- Location Requirements 8
  - Unidirectional Application 8
  - Bidirectional Application 9
  - Approach Zone and Clear Zone 9
  - Downstream Zone 9
- Installation Options 10
  - Foundations 10
  - Backup Support and Transition Options 11
  - Nose Delineation Options 11

TRACC Family Installation Guidelines 12
- Drawings and Bills of Material 12
- Recommended Tools and Equipment 12
- Safety Instructions 13
- Installation of System 14
  - Lifting the System 14
  - Anchoring the System 15
  - Attaching Backups and Transitions 16

TRACC Family Repair after Impact 17
- Repair Options 17
- Types of Damage 17
- Field Repair 18
- Removal / Replacement of System 19
- Repair at Maintenance Facility 19

Appendix 20

CUSTOMER SERVICE

Trinity Highway Products is committed to the highest level of customer service. Comments regarding the quality and workmanship of our products, their installation procedures, supporting documentation, and roadside performance are welcome. Our goal is to enhance highway safety through continuous improvement and innovation. More information can be obtained in the following ways:

Corporate Contacts:

Telephone:	800-644-7976 (U.S. Calls) 214-589-8140 (International Calls)
Fax:	214-589-8423
E-mail:	TRACC.service@trin.net TRACC.info@trin.net
Internet:	www.highwayguardrail.com www.trin.net

Regional Telephone Contacts:

Centerville, Utah	800-772-7976
Dallas, Texas	800-527-6050
East Hartford, Connecticut	800-634-7245
Elizabethtown, Kentucky	800-282-7668
Girard, Ohio	800-321-2755
Orangeburg, South Carolina	800-835-9307

TRACC FAMILY DESIGN INFORMATION

General Information

Product Overview

The TRACC (Trinity Attenuating Crash Cushion) family of products from Trinity Highway Products includes TRACC, a narrow Test Level 3 cushion; SHORTRACC, a narrow Test Level 2 cushion; FASTRACC, a narrow Test Level 3 cushion with additional capacity for head-on impacts up to 70 mph; and WideTRACC, a wide Test Level 3 cushion for any large gore area.

TRACC crash cushions are fully redirective, non-gating, bidirectional, energy absorbing crash cushions designed to protect motorists from impacting the end of concrete barriers and bridge parapet rail, bridge piers and other hazards in both permanent and temporary work zone locations. All TRACC family products are accepted by the U.S. Federal Highway Administration for use on the National Highway System regardless of design or posted speed.

WIDETRACC is an innovative system that allows the designer to tailor the cushion to the specific location. One or both sides of the system can be flared to practically any width using standard, repeating components. The flexibility of the system to flare down its left side, its right side, or both sides means that the unit can be oriented parallel with mainline roads while flaring to additional width along exit ramps or other similar roadway features.

No matter what the situation, a member of the TRACC Family of Crash Cushion products is available to meet the requirements in the most convenient, user-friendly and economical way.

Maintenance Overview

The entire TRACC family of products is designed to be a very low maintenance roadside safety feature. Except for repairs due to impact, there is virtually no maintenance required for the system. It is recommended that an annual drive-by inspection be performed to ensure that no minor impacts went undetected and that debris has not accumulated around the system.

Crash Performance

All TRACC products meet National Cooperative Highway Research Program (NCHRP) Report 350 requirements at Test Level 2 or Test Level 3. The systems will redirect vehicles that impact along their sides at angles up to 20° with the axis of the system. They will also stop vehicles that impact the ends of the systems at angles up to 15°. Testing was performed at speeds up to 100 km/hr (62.1 mph) making the TRACC Family of Crash Cushions an appropriate choice for **ALL** design speeds or posted speed limits on the National Highway System. If additional protection is desired beyond the mandated Test Level 3, the FASTRACC system is available in narrow and flared (wide) configurations and has been tested end-on at speeds up to 70 mph (113 km/hr.) For locations with design-speeds at or below 45 mph (72 km/hr), the ShorTRACC can provide full NCHRP Report 350 Test Level 2 protection.

A copy of NCHRP Report 350 can be obtained at the following address:

Transportation Research Board
National Research Council
2101 Constitution Avenue, N.W.
Washington, D.C. 20418
(202) 334-2933

Repair Options

TRACC systems are designed for field repair or rapid replacement of the entire unit. Please see the TRACC Family Repair After Impact section of this manual for more information.

Configuration Options

The TRACC Family of NCHRP Report 350 qualified crash cushions are available in several configurations as shown in Table 1.

	Test Level	Width	Length
TRACC	3	24”, 30”	21’
ShorTRACC	2	24”, 30”	14’
FasTRACC	3+ *	24”, 30”	25’ – 8”
WideTRACC – L	3, 3+	41” **	21’ **
WideTRACC – R	3, 3+	41” **	21’ **
WideTRACC – B	3, 3+ *	58” **	21’ ***

Table 1

* - Test Level 3+ refers to the fact that some units have been tested or are accepted for test conditions that exceed normal Test Level 3. Additional testing included a 2000 kg vehicle impacting at zero degrees at 70 MPH.

** - The width of the WideTRACC-L and –R can be increased by adding approved wing extensions on one side. The extensions will add 28 inches of length and 3-7/16 inches of width for each section.

*** - The width of the WideTRACC-B can be increased by adding approved wing extensions on both sides. The extensions will add 28 inches of length and 6-7/8 inches of width for each section.

WideTRACC offers designers options in protecting wide barriers and gores. The WideTRACC can be flared down its left side only, its right side only, or both sides simultaneously. Figure 1 shows the basic options available. The extension attached to the rear of the WideTRACC consists of a pair of guardrail panels continuing the height and flare angle of the WideTRACC side panels. The panels are supported by specially designed braced, base-plated posts. The lower panel is further supported by a channel that is installed between the post and the guardrail.

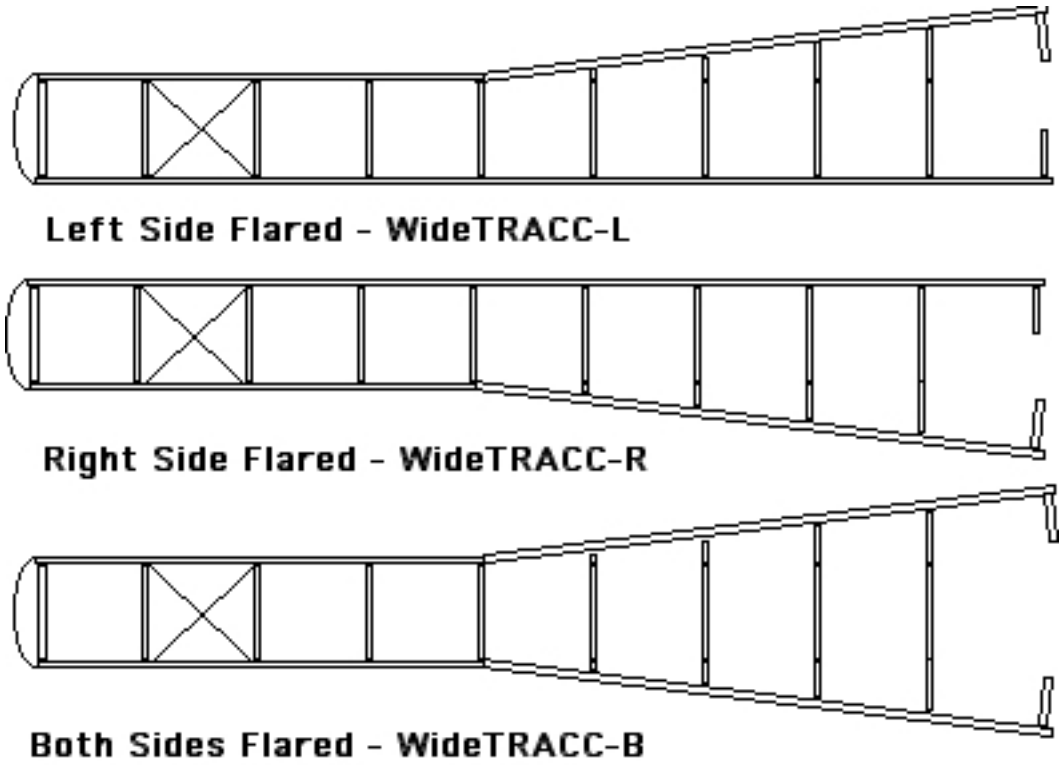

Figure 1. Basic WideTRACC configurations.

Location Requirements

Unidirectional Application

Installation of a TRACC System and its transitions depends on the traffic pattern and the backup structure at the particular location. Unidirectional traffic (one side or both) requires no transition. See Figures 2 and 3. The backup frame can be attached to any solid structure including a square cast-in-place concrete pillar, a vertical concrete wall, or the end of a New Jersey style barrier. The backup frame provides a hole pattern that may require adaptation to the backup structure. Trinity Highway Products can provide an adaptor to allow direct attachment of the backup frame to a variety of concrete barrier profiles. Call Technical Service at 800-644-7976 with questions regarding this and other types of installation.

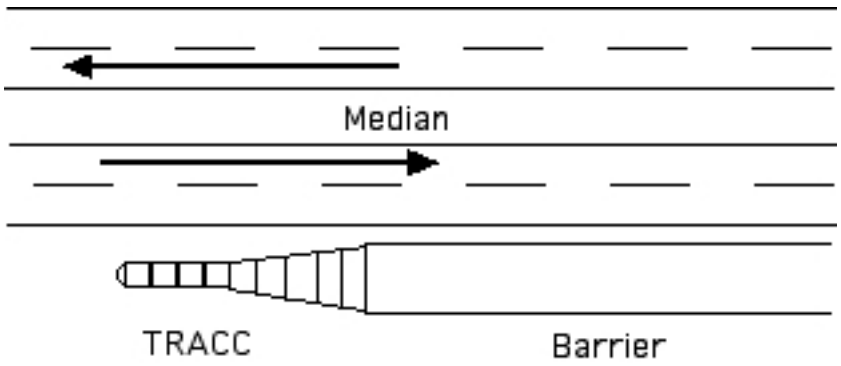

Figure 2. Unidirectional Traffic Flow - One Side - Requires No Transition.

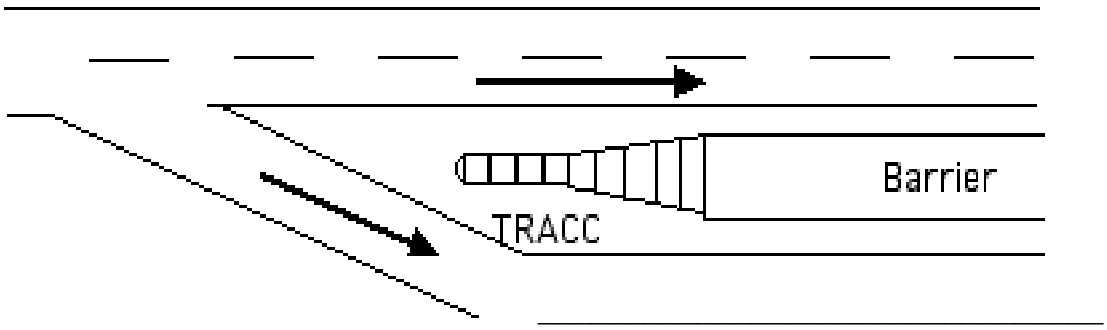

Figure 3. Unidirectional Traffic Flow - Both Sides - Requires No Transition.

Bidirectional Application

For bidirectional installations that face oncoming traffic or reverse direction traffic (see figure 4), the appropriate transition(s) should be installed on the reverse traffic side of the backup structure.

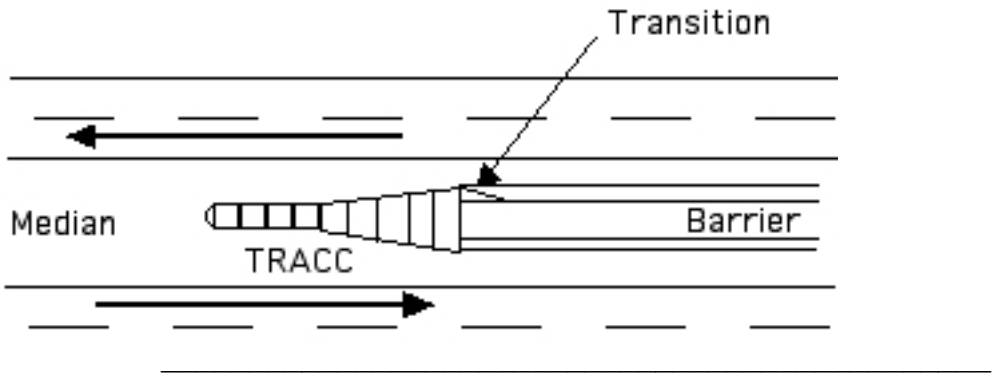

Figure 4. Bidirectional Traffic Flow - Requires Transition on One Side.

Approach Zone and Clear Zone

The TRACC System should not be placed directly behind a raised curb. The approach area in front of the system should slope at a different rate no greater than 10:1 in the direction of traffic flow. The cross slope should differ by no more than 12:1. The clear zone behind the TRACC should be consistent with the area behind the downstream Length-of-Need of the barrier. The entire length of the TRACC can be used in Length-of-Need calculations as it is fully redirecting.

Downstream Zone

The TRACC should be installed so that a 60” clear space will exist on both sides of the backup structure for the side panels to retract during an end-on impact (see figure 5).

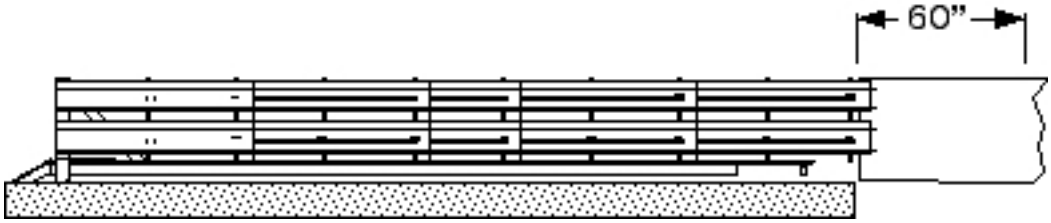

Figure 5. Clear Space for Panel Retraction

Installation Options

Foundations

During an impact, the stopping force provided by a TRACC System is **NOT** transferred to the backup structure beyond the cushion. All the stopping loads pass to the foundation **BELOW** the system through the anchor bolts that attach the system to the foundation.

TRACC Systems can be anchored to combinations of asphalt, concrete, and compacted subbase as shown in Table 2 below.

6” Reinforced Concrete

8” Unreinforced Concrete

3” Minimum Asphalt over 3” Minimum Concrete

6” Asphalt over 6” Compact Subbase

8” Minimum Asphalt

Table 2. Foundation Options

TRACC Foundation Drawings

SS1010 TRACC TL-3 Crash Cushion Attenuating Terminal 22’ Concrete Foundation Plan

SS1011 FasTRACC TL-3 Crash Cushion Attenuating Terminal 26’ 8” Concrete Foundation Plan

SS1013 ShorTRACC TL-2 Crash Cushion Attenuating Terminal 14’ Concrete Foundation Plan

Backup Support and Transition Options

The TRACC with its sliding side panels can be attached or transitioned to any backup structure capable of supporting the last frame. If the system has been extended to greater widths as described previously for the WideTRACC, the flared guardrail panels used to create the extra width can be attached to any downstream barrier or structure just as a standard guardrail would be attached.

The following drawings are located in the Appendix of this manual. They provide the necessary detail for attachment and transition to their subject structures.

SS453, "TRACC Transition to W-Beam Median Barrier Soil Post Option"
SS454, "TRACC Transition to Thrie Beam Median Barrier Soil Post Option"
SS455, "TRACC Transition to W-beam Median Barrier Plan, Elevation & Sections"
SS456, "TRACC Transition to Vertical Wall"
SS461, "TRACC Transition to Concrete Safety Shape Barrier Plan, Elevation & Sections"
SS462, "TRACC Transition to Concrete Barrier Single Slope Plan, Elevation & Sections"
SS463, "TRACC Transition to Thrie Beam Median Barrier Plan, Elevation & Sections"
SS464, "TRACC Transition to Thrie Beam Median Barrier All Wood Post"
SS497, "WideTRACC - Optional Wing Extensions"

Nose Delineation Options

The TRACC is intended for use on either shoulder or in the median in both unidirectional and bidirectional traffic situations. To provide the greatest level of safety, the delineation of the plastic nose section can be customized for any particular location. Four pieces of reflective tape are provided with the TRACC and can be used to delineate left shoulder, right shoulder, and gore applications. All four identical pieces of reflective tape can be used to create the three designs as shown below. The plastic nose should be attached to the front of the TRACC system using the side panel attachment hardware already located on the system.

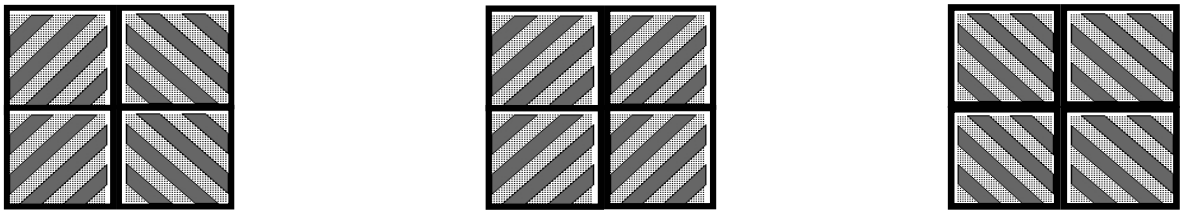

Gore Area | Right Shoulder | Left Shoulder

Figure 6. Nose Delineation Options.

Note: Consult local transportation authorities for delineation requirements.

TRACC FAMILY INSTALLATION GUIDELINES

Drawings and Bills of Material

Drawings and bills of material for the most popular TRACC System options are shown in the Appendix to this manual. If parts are missing from a TRACC System shipment or if you have questions regarding installation options, please contact Trinity Highway Products Technical Service at 800-644-7976.

Recommended Tools and Equipment

1. Forklift or Crane (4000 pound capacity)
2. Lifting Slings or Chains
3. Air hammer/drill 35/50# and appropriate power source
4. Rock drill bit 11/16” x 16” with 30” extender
5. Socket and Ratchet Set or Flat Wrenches - 3/8” to 1-1/4”
6. Traffic control equipment
7. Gloves, safety goggles, and back protection for lifting
8. Dispensing Gun and Mixing Tubes for Hilti HY-150 Adhesive

Safety Instructions

Always use appropriate safety precautions when operating power equipment, mixing chemicals, and moving heavy equipment. Gloves, safety goggles and back protection should be used.

Safety measures incorporating appropriate traffic control devices should also be used to protect personnel while at the installation site. Trinity Highway Products offers an economical and effective truck mounted attenuator, the MPS-350, for the protection of workers in work zones. For more information on the MPS-350 call 800-644-7976, or visit the Trinity Highway Products website at www.highwayguardrail.com.

Installation of System

To facilitate accurate communication regarding the parts of the TRACC and WideTRACC, Figure 7 shows the two systems with side panels removed and major parts labeled.

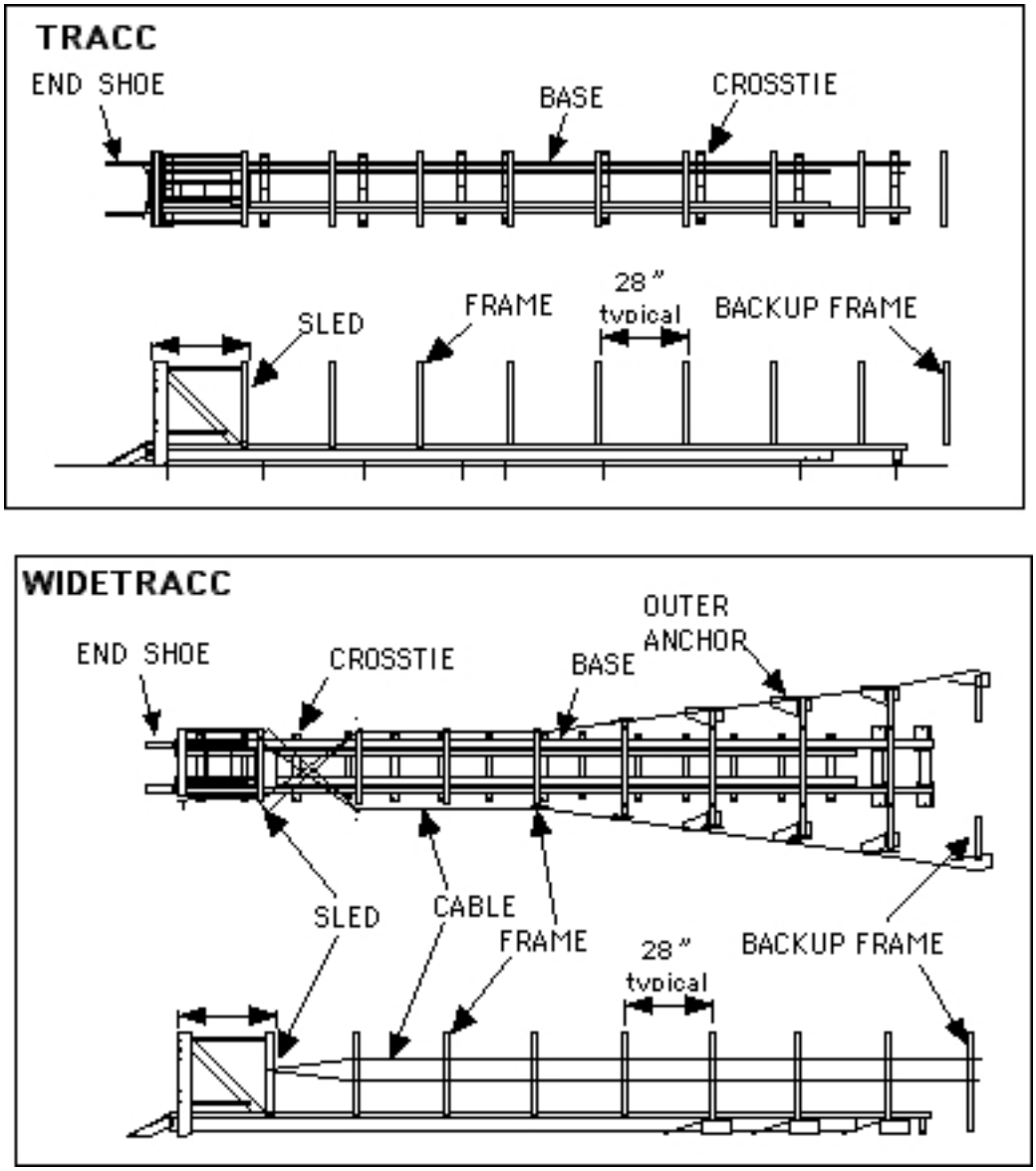

Figure 7. Major Components of the TRACC and WideTRACC. (The side panels have been removed from the outside of the systems for clarity.)

Lifting the System

TRACC Systems can be lifted as complete units by threading lifting chains or slings directly through the tops of the frames. Someone should maintain control of the system by guiding the end as it is lifted and moved. Care should be taken to ensure that the system can be handled safely prior to moving.

Anchoring the System

TRACC Systems can be installed on combinations of asphalt and concrete. Table 3 shows the types of foundations that can be used and the anchoring studs that are required. In general, concrete installation can be performed using 7-1/8 inch anchor studs while asphalt installation requires 18-inch anchor studs. Holes should be drilled 1.5 inches less than the overall length of the anchor stud to ensure proper embedment.

TRACC Systems can be placed directly onto the foundation as a complete unit. The system should be aligned within 1° of the downstream barrier according to the approach and downstream zone requirements set forth in the section entitled, "Location Requirements." Holes for the anchor studs can be drilled into the foundation using the system as a template. Because of the open design of all the TRACC systems including the WideTRACC, it is not necessary to disassemble any portion of the system in order to drill the anchoring holes. Note that the flared portion of the WideTRACC requires additional outboard anchors that have been shipped loose and must also be anchored to the foundation. Special attention should be paid to drawing SS496, "WideTRACC Double Flare - Plan Elevations and Sections," for the location of those outboard anchors.

After the holes are drilled, the adhesive system can be dispensed into the hole and then the anchor stud should be suspended by its nut and washer through the crosstie. Figure 8 shows how the anchor stud should pass through the crosstie suspended by its nut and washer. The stud should hang in the uncured adhesive with no threads showing above the nut. Final tightening of the anchor nuts should be done after the adhesive has set. (See adhesive manufacturer's instructions for set times under various environmental conditions.)

Table 3. Anchor Stud Selection Table

Foundation	Anchor Stud Size
6" Reinforced Concrete	5/8" d x 7 – 1/8" long
8" Unreinforced Concrete	5/8" d x 7 – 1/8" long
3" Minimum Asphalt over 3" Min. Concrete	5/8" d x 18" long
6" Asphalt over 6" Compact Subbase	5/8" d x 18" long
8" Minimum Asphalt	5/8" d x 18" long

NOTE: If asphalt is located over a minimum of 6-inches of concrete, the 18-inch anchor studs can be cut off to a total length equal to the asphalt thickness plus 7.5 inches.

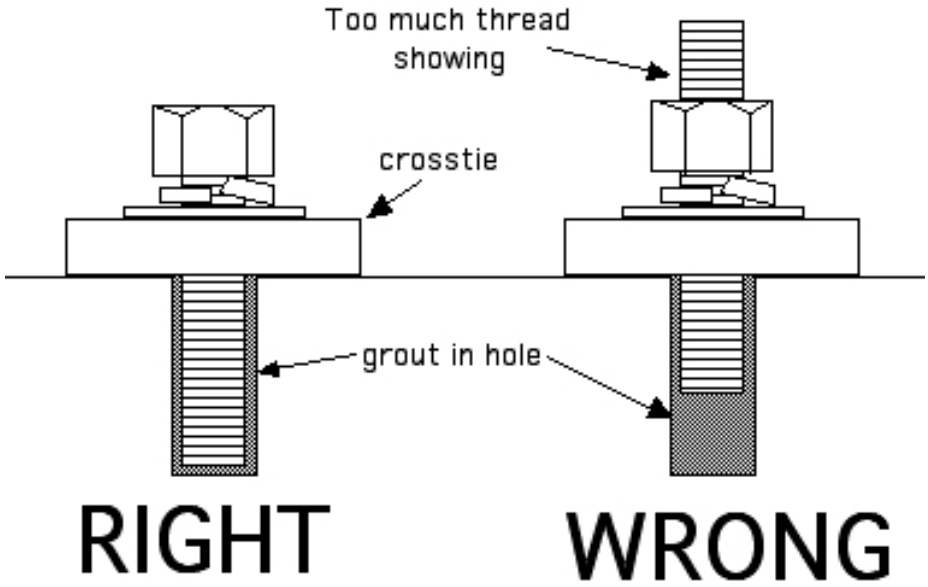

Figure 8. Suspending the Anchor Studs in the Uncured Adhesive.

Attaching Backups and Transitions

The last support frame on a TRACC System must be attached to something in order to support the side panels and any required transition panels. While no direct stopping forces are transmitted into the backup support structure, its presence is important for possible redirecting impacts. Drawings in the Appendix show the TRACC systems attached to and shielding a variety of downstream barriers and structures. For more information about specific installation options not shown in the Appendix drawings, contact Technical Service at 800-644-7976.

NOTE: The width of the WideTRACC can be adjusted through the addition of wing extension sections as shown in drawing SS497, “WideTRACC Double Flare Wing Extension Structures,” located in the Appendix.

TRACC FAMILY REPAIR AFTER IMPACT

Repair Options

TRACC systems are designed for field repair or rapid replacement of the entire unit.

The energy absorbing portions of the base assembly of the TRACC system can be replaced in stages depending on the extent of the impact. Because TRACC systems are delivered fully assembled, it is extremely practical to replace the entire damaged system on the roadside and then perform the necessary repairs safely and accurately in the maintenance shop away from traffic dangers. Many of a TRACC system's components remain undamaged after most impacts making refurbishment simple and economical.

NOTE:
TRACC PRODUCTS ARE **NOT** DISPOSABLE. COMPLETE REPLACEMENT ON THE ROADSIDE AFTER AN IMPACT IS A CONVENIENT - BUT NOT REQUIRED - WAY TO PROTECT WORKERS BY LIMITING EXPOSURE TO TRAFFIC. UP TO 98% OF A TRACC SYSTEM IS REUSABLE AFTER DESIGN IMPACTS REGARDLESS OF WHETHER THE REPAIR IS PERFORMED IN THE FIELD OR IN THE SAFETY OF THE MAINTENANCE YARD.

Types of Damage

TRACC Systems are designed to withstand end-on impacts and redirecting side impacts. Side impacts, depending on the severity, may only cause cosmetic damage to the system. Any system that has been impacted along its side should

be examined to make sure that the damage is only cosmetic and that any damage that might hinder subsequent function of the system is repaired.

During some severe high-speed redirecting impacts with heavy vehicles, a TRACC System may become permanently twisted. If the deformation of the base causes a portion of one side of the system to be raised more than one and one half inches when compared to the other side of the system, then the damaged portion of the base assembly should be replaced.

Field Repair

The 2005 TRACC Family of Crash Cushions is specifically designed for rapid field repair. Removal and replacement of the system remains a valid option for those who prefer to work on the system away from the roadside.

NOTE:

Minor impacts that stroke the system less than 53 inches will require pulling the sled out to its original position and checking the system for damage. If there is no damage then the system is ready for service. If damaged components are found, they should be replaced.

TRACC Systems can be repaired in the field by replacing the parts that have been damaged. The first step for repair will be to disconnect the sled and its attached side panels from the remainder of the system and pull them back to their original upstream location. To facilitate this it may be necessary to release the shredder plates from the sled and to partially remove the straps that brace the lower part of the sled. Don't forget to replace the shredder plates and reattach the straps once the sled is relocated to its original position.

The energy absorbing rip plates attached to the top of the base assembly can be replaced in stages. The rip plates are held in place with doubler plates. Each doubler plate is secured with three (3) bolts. The doubler bolts are accessed directly from above the base assembly. Special care should be taken to ensure that new rip plates are installed in the proper location on the base assembly. Please refer to the applicable assembly drawing in the appendix for details about rip plate location and attachment.

The side panels and frames can now be redistributed along the length of the system. It may be necessary to loosen some of the panel attachment hardware in order to facilitate respacing. The reassembled sled and its side panels can be attached to the remainder of the system and all the hardware tightened to complete the repair job. Several innovative features have been incorporated into the 2005 TRACC system to make this process simple.

In the case of redirecting impacts along the side of the system, it may be necessary to replace only side panels and other upper structural pieces so long as the base assembly under the system is not damaged.

Removal / Replacement of System

The TRACC can be removed from its foundation by releasing the anchor nuts that hold the crossties down. Flat wrenches may be required to access the anchor studs under the displaced frames and sled. Once released, the system can be lifted as a unit and transported back to a maintenance facility for repair. A new or reconditioned TRACC can be positioned on the existing anchor studs and firmly attached using the appropriate nuts and washers.

In some impacts, a small number of anchor studs may become bent or fractured. In these cases it will be necessary to remove the old anchor, drill out the adhesive in the old hole, and replace the removed anchor with a new anchor and adhesive.

Repair at Maintenance Facility

In general, the procedure for repairing a TRACC at a Maintenance Facility will be the same as a field repair. Should you encounter technical difficulties, help is available by calling Trinity Highway Products Technical Service at 800-644-7976.

The first step for repair will be to disconnect the sled and its attached side panels from the remainder of the system and pull them back to their original upstream location. To facilitate this it may be necessary to release the shredder plates from the sled and to partially remove the straps that brace the lower part of the sled. Don't forget to replace the shredder plates and reattach the straps once the sled is relocated to its original upstream position.

The energy absorbing rip plates attached to the top of the base assembly can be replaced in stages. The rip plates are held in place with doubler plates. Each doubler plate is secured with three (3) bolts. The doubler plate bolts are accessed directly from above the base assembly. Special care should be taken to ensure that new rip plates are installed in the proper location on the base assembly. Please refer to the applicable assembly drawing in the appendix for details about rip plate location and attachment.

The side panels and frames can now be redistributed along the length of the system. It may be necessary to loosen some of the panel attachment hardware in order to facilitate respacing. The reassembled sled can be reattached to the side panels and all the hardware tightened to complete the repair job.

APPENDIX

SS453	TRACC Transition to W-Beam Median Barrier Soil Post Option”
SS454	TRACC Transition to Thrie Beam Median Barrier Soil Post Option
SS455	TRACC Transition to W-beam Median Barrier Plan, Elevation & Sections
SS456	TRACC Transition to Vertical Wall
SS461	TRACC Transition to Concrete Safety Shape Barrier Plan, Elevation & Sections
SS462	TRACC Transition to Concrete Barrier Single Slope Plan, Elevation & Sections
SS463	TRACC Transition to Thrie Beam Median Barrier Plan, Elevation & Sections
SS464	TRACC Transition to Thrie Beam Median Barrier All Wood Post
SS497	WideTRACC - Optional Wing Extensions
SS1000	Crash Cushion Attenuating Terminal - Plan, Elevations, and Sections, Assembled Unit, Base, and Rip Plate Schematic
SS1001	Crash Cushion Attenuating Terminal – Assembled Base Unit
SS1002	Crash Cushion Attenuating Terminal - Plan, Elevations, and Sections, Shop Assembly Details, Pages 1, 2
SS1003	Crash Cushion Attenuating Terminal - Plan, Elevations, and Sections, Unidirectional, Direct Attachment
SS1004	ShorTRACC Crash Cushion Attenuating Terminal – Assembled Base Unit
SS1005	ShorTRACC Crash Cushion Attenuating Terminal – Shop Assembly Details, Pages 1, 2
SS1006	ShorTRACC Crash Cushion Attenuating Terminal – Plan, Elevation, and Sections, Unidirectional, Direct Attachment
SS1007	FasTRACC Crash Cushion Attenuating Terminal – Assembled Base Unit
SS1008	FasTRACC Crash Cushion Attenuating Terminal – Plan Elevation, and Section, Shop Assembly Details, Pages 1, 2
SS1009	FasTRACC Crash Cushion Attenuating Terminal – Plan, Elevation, and Sections, Unidirectional, Direct Attachment
SS1010	TRACC Crash Cushion Attenuating Terminal, 22’ Concrete Foundation Plan
SS1013	TRACC Crash Cushion Attenuating Terminal, 15’ Concrete Foundation Plan
SS1018	58” WideTRACC Double Flare Crash Cushion Attenuating Terminal – Plan, Elevation, and Sections – Shop Assembly Details, Pages 1, 2, 3
SS1019	58” WideTRACC Double Flare Crash Cushion Attenuating Terminal – Plan, Elevation, and Sections – Unidirectional, Direct Attachment

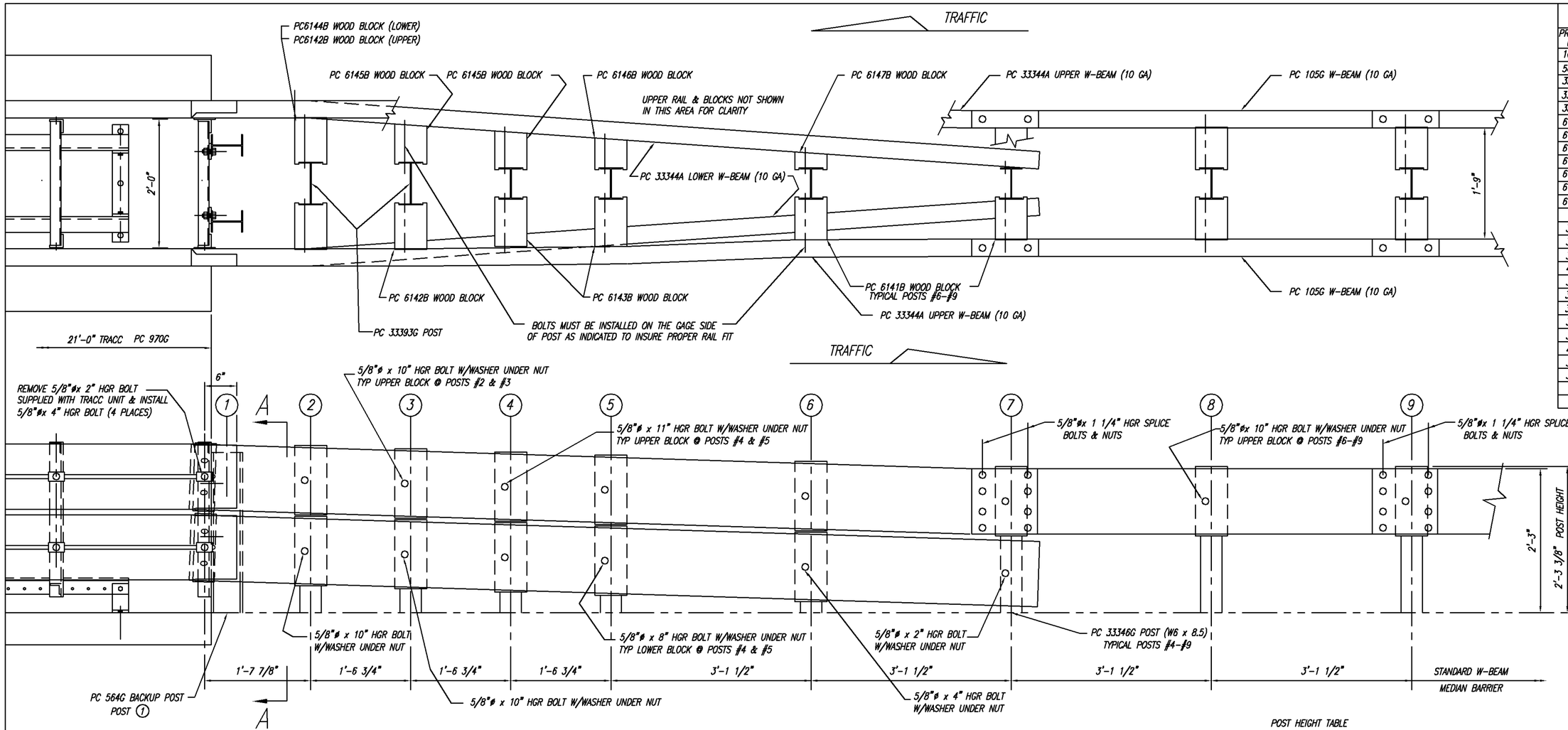

TRACC TRANSITION BILL OF MATERIAL

PRODUCT CODE	QTY	DESCRIPTION
105G	2	10/6'3/TRACC (GUARDRAIL)
564G	2	BACKUP POST (W6 x 8.5 x 6'-6")
33344A	4	10/12'6/TRACC (GUARDRAIL)
33393G	2	POST W8 x 13 x 7'-6"
33346G	6	POST W6 x 8.5 x 6'-6"
6141B	8	RTD WD BLOCK 1'-1 (6 x 8)
6142B	4	RTD WD BLOCK 1'-1 (6 x 8 3/4)
6143B	4	RTD WD BLOCK 1'-1 (6 x 9 1/4)
6144B	2	RTD TPRD WD BLK 1'-1 (6 x 8 9/16)
6145B	4	RTD TPRD WD BLK 1'-1 (6 x 7 1/4)
6146B	2	RTD TPRD WD BLK 1'-1 (6 x 5 15/16)
6147B	2	RTD TPRD WD BLK 1'-1 (6 x 3 3/8)
HARDWARE		
3510G	4	5/8"ø x 11" HGR POST BOLT
3500G	16	5/8"ø x 10" HGR POST BOLT
3480G	4	5/8"ø x 8" HGR POST BOLT
4432G	6	5/8"ø x 4" HGR POST BOLT
3400G	2	5/8"ø x 2" HGR POST BOLT
3360G	32	5/8"ø x 1 1/4" HGR SPLICE BOLT
3340G	60	5/8" HGR HEX NUT
3300G	32	5/8" FLAT WASHER (@ HGR POST BOLTS)
3404G	12	5/8"ø x 2" HEX HD BOLT (A325)
4372G	20	5/8" WASHER
3310G	4	5/8" LOCKWASHER
3361G	12	5/8" HEX NUT

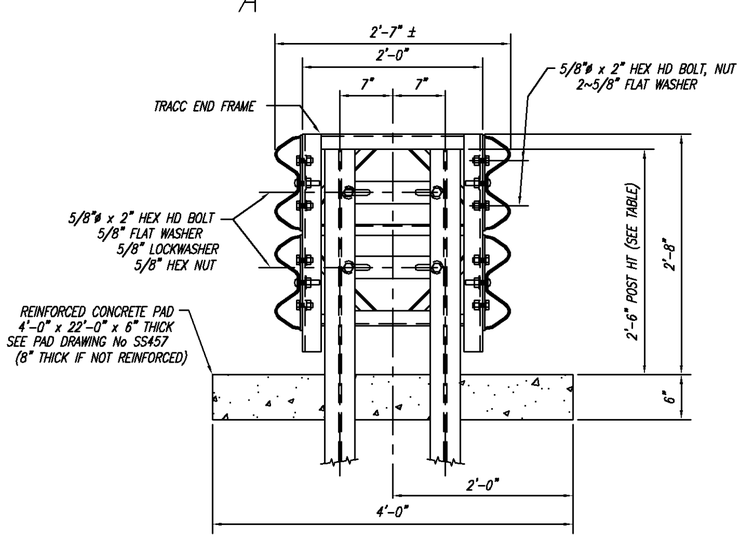

SECTION "A-A"

POST HEIGHT TABLE

POST NO	HEIGHT
1	2'-6"
2	2'-7 3/8"
3	2'-6 3/4"
4	2'-6 1/8"
5	2'-5 1/2"
6	2'-4 3/8"
7	2'-3 3/8"
8	2'-3 3/8"
9	2'-3 3/8"

REV.	CHK'D	BY	DATE	REMARKS
1		BT	6-7-01	REVISED POSTS #2 & #3 AND LENGTH OF TRANSITION.

TRACC

TRACC TRANSITION TO
W-BEAM MEDIAN BARRIER
PLAN, ELEVATION & SECTIONS
(ALL DRIVEN POSTS)

TRINITY INDUSTRIES, INC.
HIGHWAY SAFETY PRODUCTS
2525 STEMMONS FREEWAY, DALLAS, TX 75356

DRAWN	B.T.
CHECKED	
APPROVED	
DATE	8/16/00
ENG. FILE #	SS453-01E
SHT.No.	E1 OF 1
DRAWING NO.	SS 453
REV.	1

COPYRIGHT © 2000 TRINITY INDUSTRIES INC

This drawing and the information shown thereon is the sole property of TRINITY INDUSTRIES, INC. Neither the drawing nor such information is to be used for any purpose other than that for which it was specifically furnished by TRINITY INDUSTRIES, INC., nor is any reproduction authorized without written permission.

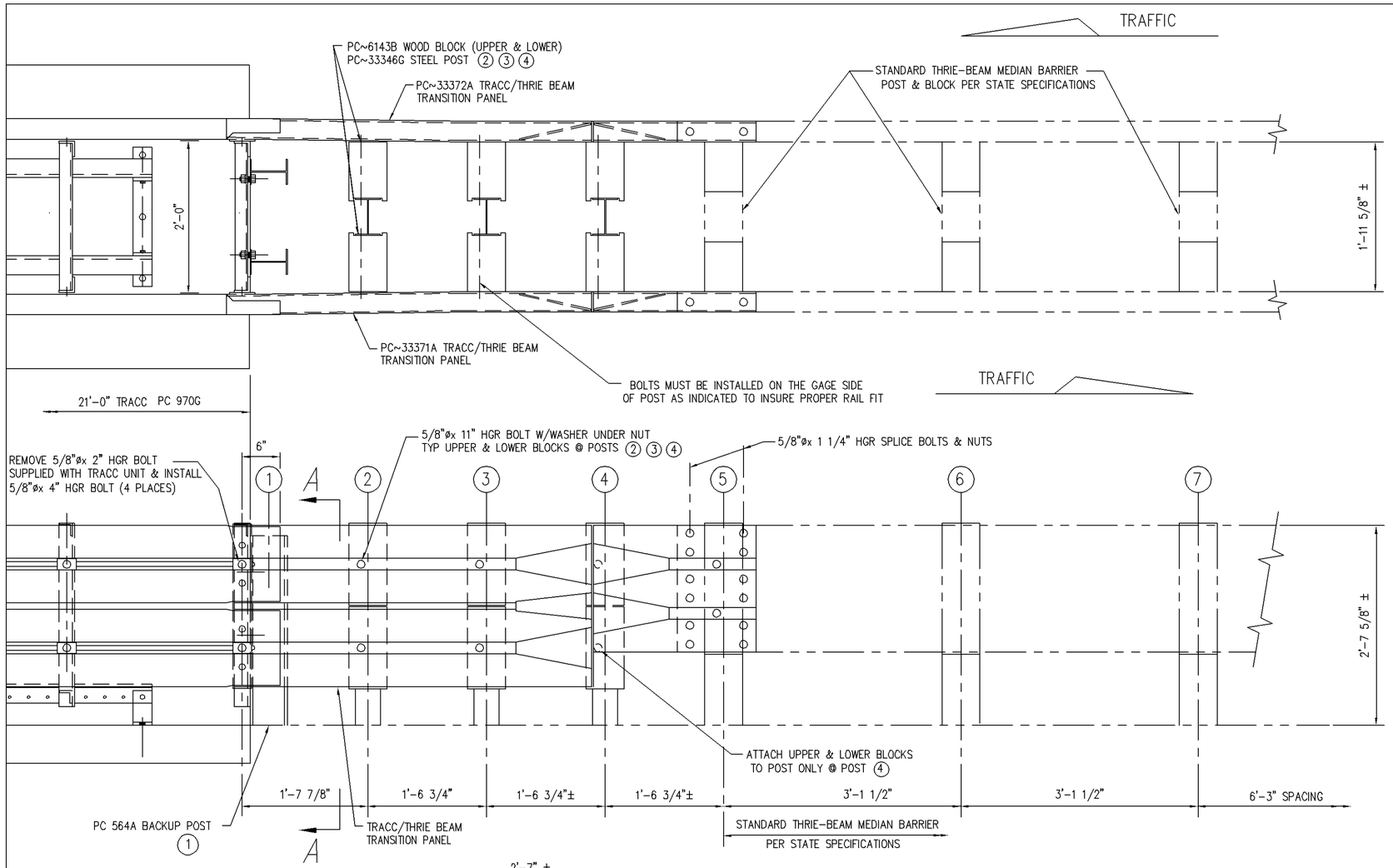

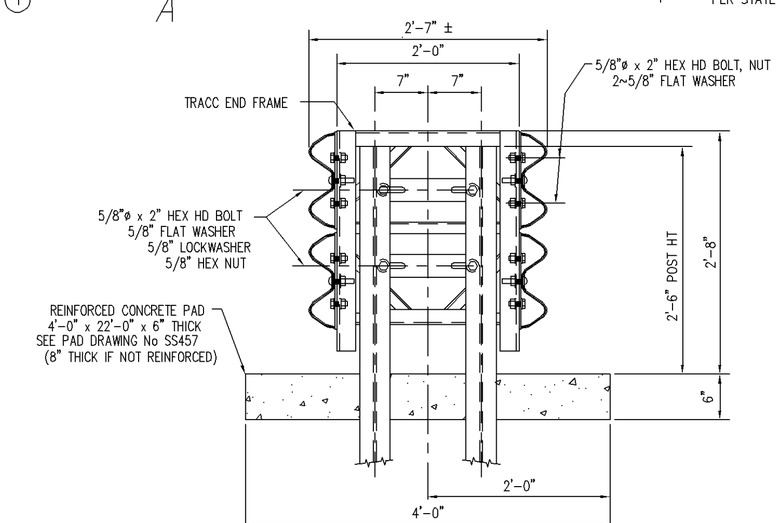

SECTION "A-A"

TRACC TRANSITION BILL OF MATERIAL

PRODUCT CODE	QTY	DESCRIPTION
564G	2	POST W6 x 8.5 x 6'-6"
6143B	12	RTD WD BLOCK 1'-1 (6 x 9 1/4)
33346G	3	POST W6 x 8.5 x 6'-6"
33371A	1	TRACC/THRIE BEAM TRANSITION PANEL
33372A	1	TRACC/THRIE BEAM TRANSITION PANEL
HARDWARE		
4432G	4	5/8"ø x 4" HGR POST BOLT
3510G	12	5/8"ø x 11" HGR POST BOLT
3360G	24	5/8"ø x 1 1/4" HGR SPLICE BOLT
3340G	36	5/8" HGR HEX NUT
3300G	12	5/8" FLAT WASHER (@ HGR POST BOLTS)
3404G	12	5/8"ø x 2" HEX HD BOLT (A325)
4372G	20	5/8" WASHER
3310G	4	5/8" LOCKWASHER
3361G	12	5/8" HEX NUT

REV.	CHK'D	BY	DATE	REMARKS

TRACC

TRACC TRANSITION TO THRIE BEAM MEDIAN BARRIER PLAN, ELEVATION & SECTIONS (ALL DRIVEN POSTS)

TRINITY INDUSTRIES, INC.
HIGHWAY SAFETY PRODUCTS
2525 STEMMONS FREEWAY, DALLAS, TX 75356

DRAWN	B.T.
CHECKED	
APPROVED	
DATE	8-22-00
ENG. FILE #	SS454-01E
SHT.No.	E1 OF 1
DRAWING NO.	SS 454
REV.	0

COPYRIGHT © 2000 TRINITY INDUSTRIES INC

This drawing and the information shown thereon is the sole property of TRINITY INDUSTRIES, INC. Neither the drawing nor such information is to be used for any purpose other than that for which it was specifically furnished by TRINITY INDUSTRIES, INC., nor is any reproduction authorized without written permission.

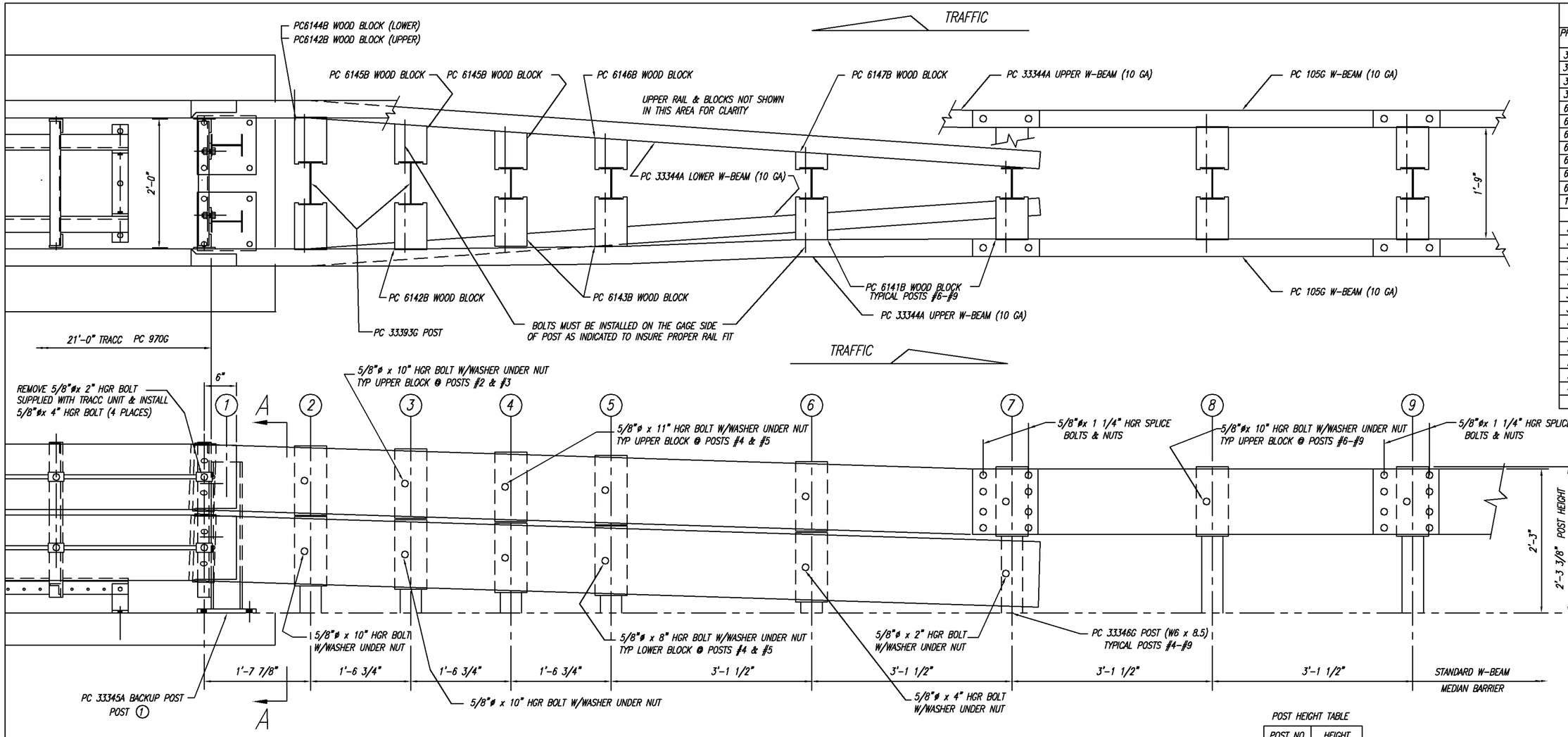

TRACC TRANSITION BILL OF MATERIAL

PRODUCT CODE	QTY	DESCRIPTION
33344A	4	10/12'6/TRACC (GUARDRAIL)
33393G	2	POST W8 x 13 x 7'-6"
33345A	2	BASE PL BACKUP POST (W6 x 8.5)
33346G	6	POST W6 x 8.5 x 6'-6"
6141B	8	RTD WD BLOCK 1'-1 (6 x 8)
6142B	4	RTD WD BLOCK 1'-1 (6 x 8 3/4)
6143B	4	RTD WD BLOCK 1'-1 (6 x 9 1/4)
6144B	2	RTD TPRD WD BLK 1'-1 (6 x 8 9/16)
6145B	4	RTD TPRD WD BLK 1'-1 (6 x 7 1/4)
6146B	2	RTD TPRD WD BLK 1'-1 (6 x 5 15/16)
6147B	2	RTD TPRD WD BLK 1'-1 (6 x 3 3/8)
105G	2	10/6'3/TRACC (GUARDRAIL)
		HARDWARE
3510G	4	5/8"ø x 11" HGR POST BOLT
3500G	16	5/8"ø x 10" HGR POST BOLT
3480G	4	5/8"ø x 8" HGR POST BOLT
4432G	6	5/8"ø x 4" HGR POST BOLT
3400G	2	5/8"ø x 2" HGR POST BOLT
3360G	32	5/8"ø x 1 1/4" HGR SPLICE BOLT
3340G	60	5/8" HGR HEX NUT
3300G	36	5/8" FLAT WASHER (@ HGR POST BOLTS)
3404G	12	5/8"ø x 2" HEX HD BOLT (A325)
4372G	20	5/8" WASHER
3310G	12	5/8" LOCKWASHER
3361G	20	5/8" HEX NUT
4451G	8	5/8"ø x 6" WEDGE ANCHOR

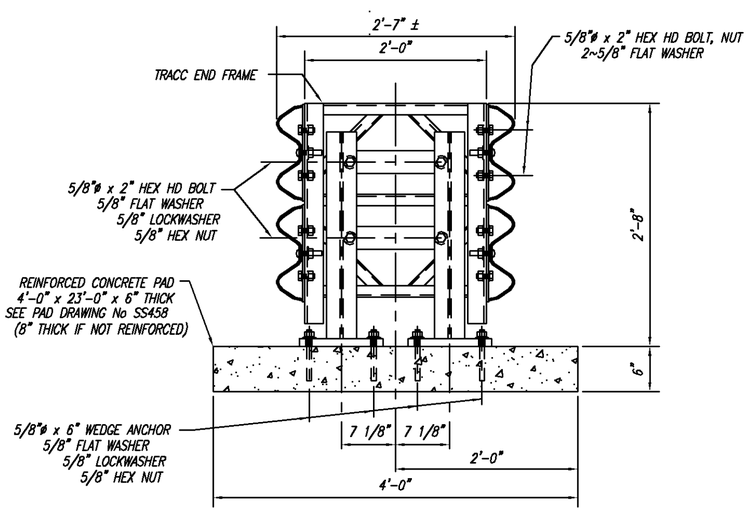

SECTION "A-A"

POST HEIGHT TABLE

POST NO	HEIGHT
2	2'-7 3/8"
3	2'-6 3/4"
4	2'-6 1/8"
5	2'-5 1/2"
6	2'-4 3/8"
7	2'-3 3/8"
8	2'-3 3/8"
9	2'-3 3/8"

REV.	CHK'D	BY	DATE	REMARKS
1		BT	12-18-00	REVISED POSTS #2 & #3 AND LENGTH OF TRANSITION.

TRACC

TRACC TRANSITION TO
W-BEAM MEDIAN BARRIER
PLAN, ELEVATION & SECTIONS

TRINITY INDUSTRIES, INC.
HIGHWAY SAFETY PRODUCTS
2525 STEMMONS FREEWAY, DALLAS, TX 75356

DRAWN B.T.
CHECKED
APPROVED
DATE 11/02/99
ENG. FILE # SS455-01E
SHT.No. E1 OF 1
DRAWING NO. SS 455
REV. 1

COPYRIGHT © 1999 TRINITY INDUSTRIES INC

This drawing and the information shown thereon is the sole property of TRINITY INDUSTRIES, INC. Neither the drawing nor such information is to be used for any purpose other than that for which it was specifically furnished by TRINITY INDUSTRIES, INC., nor is any reproduction authorized without written permission.

TRACC TRANSITION BILL OF MATERIAL		
PRODUCT CODE	QTY	DESCRIPTION
33367G	2	TRACC 10GA END SHOE
HARDWARE		
3310G	4	5/8" LOCKWASHER
4451G	4	5/8"ø x 6" WEDGE EXP ANCHOR
4688G	8	3/4"ø x 5 1/2" WEDGE EXP ANCHOR

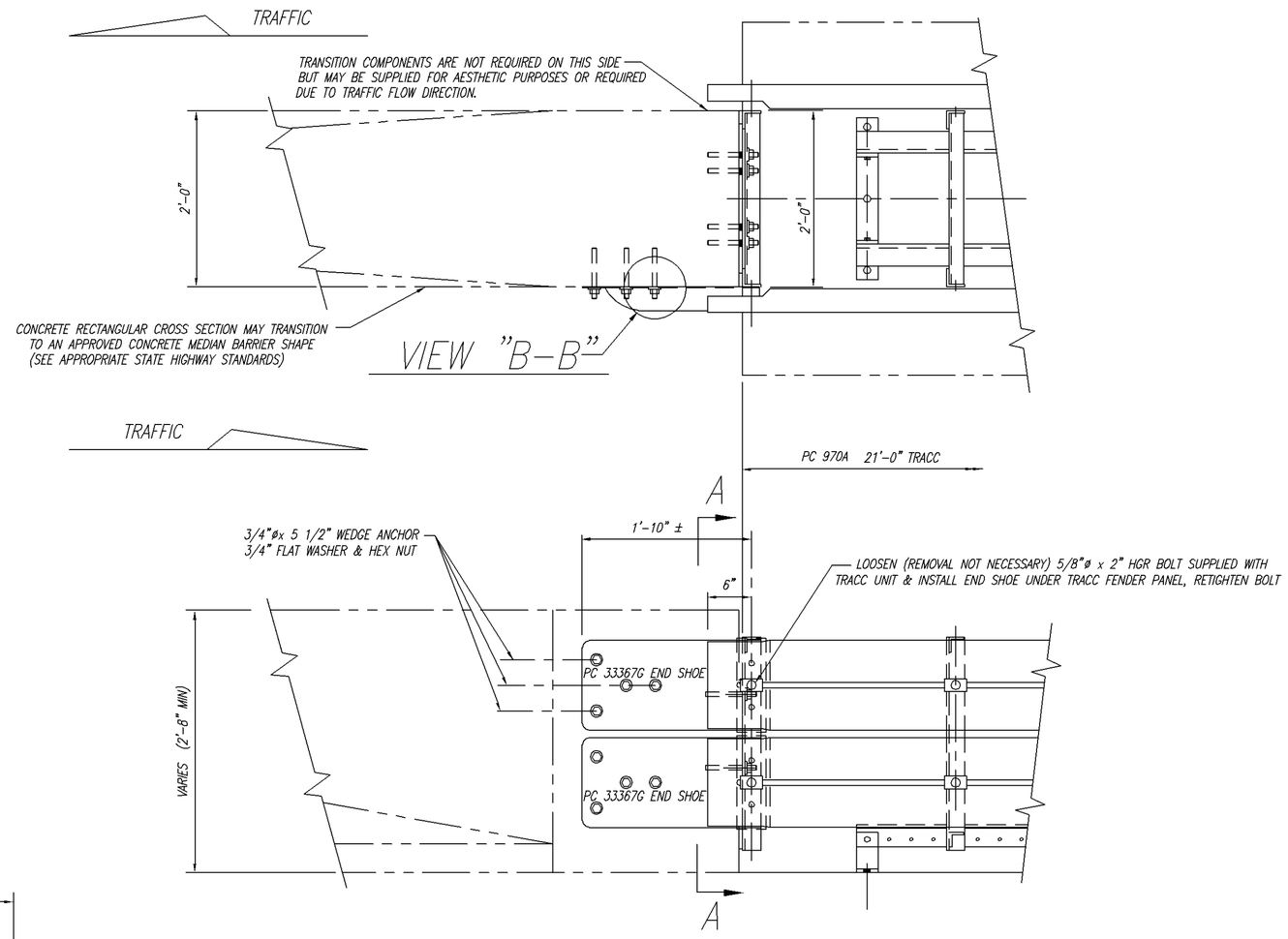

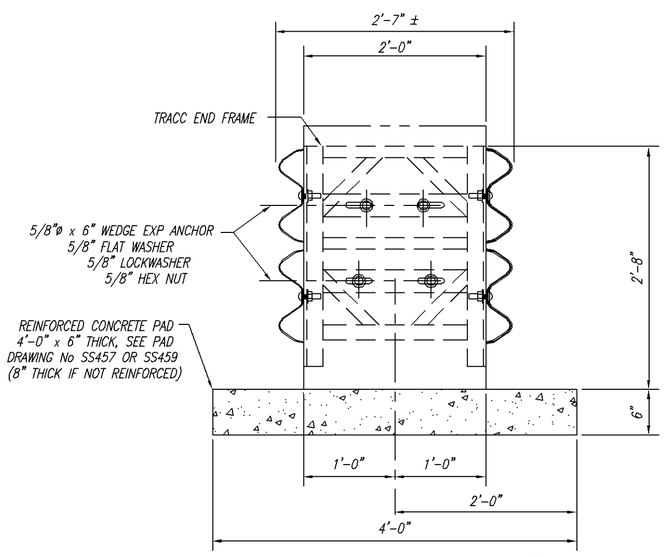

SECTION "A-A"

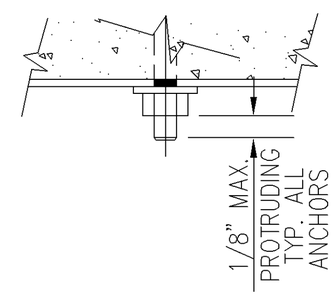

VIEW "B-B"

REV.	CHK'D	BY	DATE	REMARKS
1	B.T.	L.H.	11/19/03	ADDED EXPANSION BOLT VIEW B-B

TRACC

TRACC TRANSITION TO VERTICAL CONCRETE WALL, PIER, PARAPET OR BARRIER PLAN, ELEVATION & SECTIONS

TRINITY INDUSTRIES, INC.
HIGHWAY SAFETY PRODUCTS
2525 STEMMONS FREEWAY, DALLAS, TX 75356

DRAWN	B.T.
CHECKED	
APPROVED	
DATE	9-7-00
ENG. FILE #	SS456-01E
SHT.No.	E1 OF 1
DRAWING NO.	SS 456
REV.	1

COPYRIGHT © 2000 TRINITY INDUSTRIES INC

This drawing and the information shown thereon is the sole property of TRINITY INDUSTRIES, INC. Neither the drawing nor such information is to be used for any purpose other than that for which it was specifically furnished by TRINITY INDUSTRIES, INC., nor is any reproduction authorized without written permission.

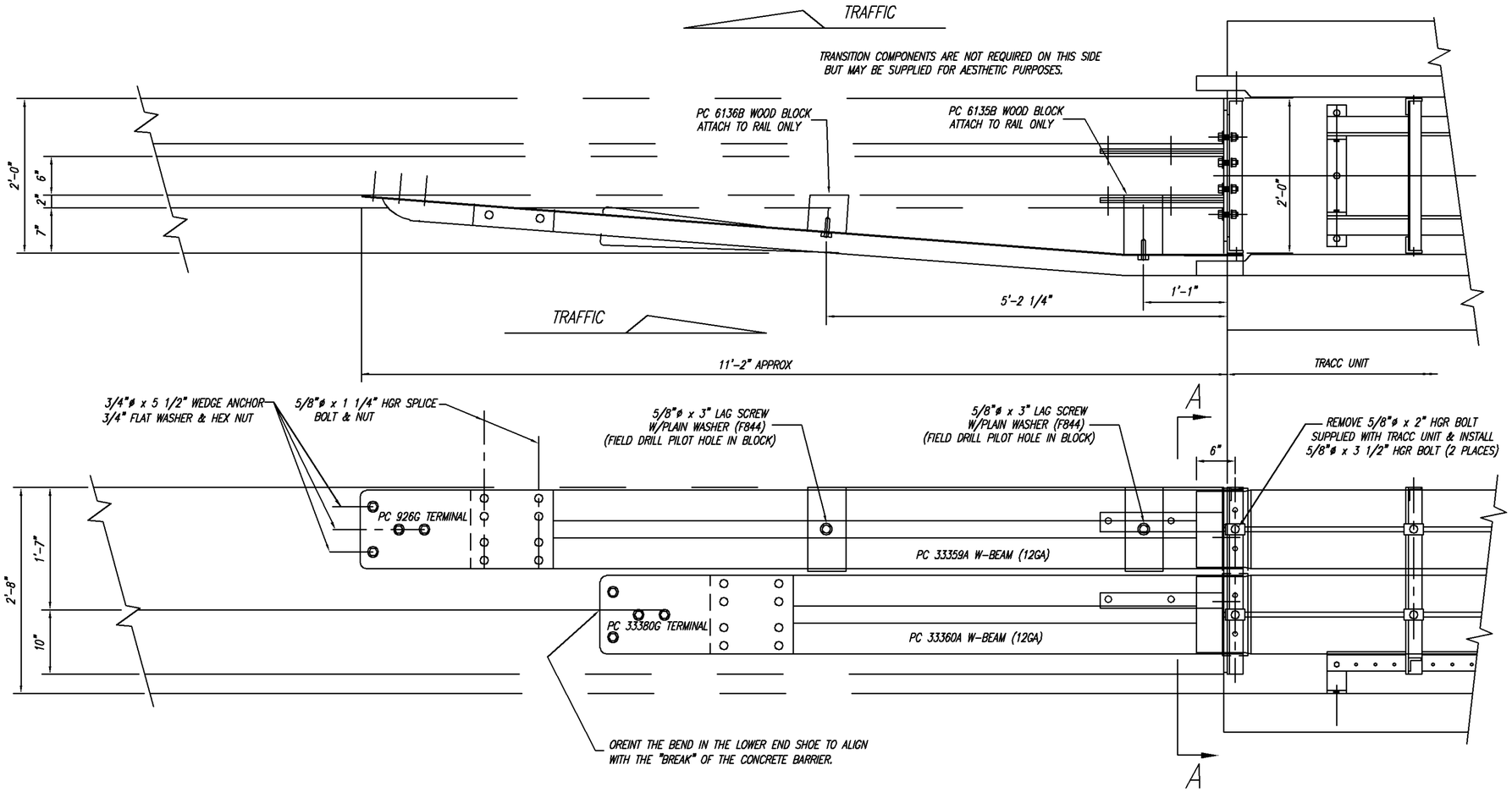

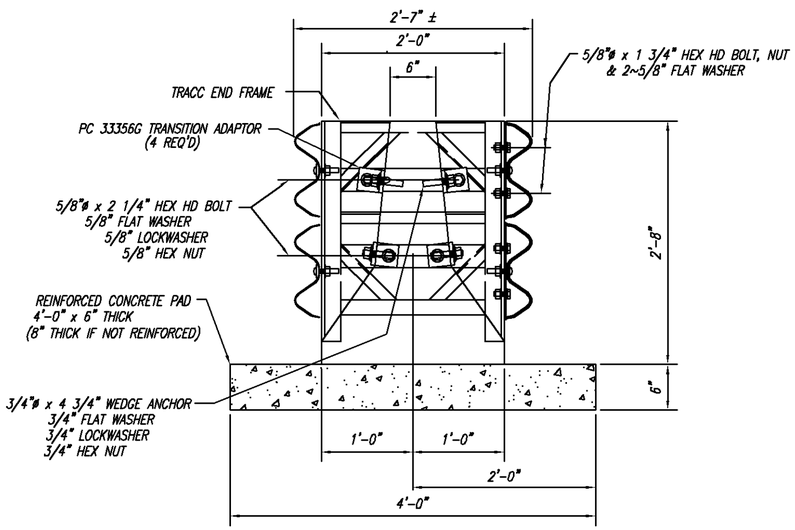

SECTION "A-A"

TRACC TRANSITION BILL OF MATERIAL

PRODUCT CODE	QTY	DESCRIPTION
926G	1	10/END SHOE/EXTRA HOLE (UPPER)
6135B	1	TAPERED WD BLK 1'-1" (6 x 8 1/2)
6136B	1	TAPERED WD BLK 1'-1" (6 x 5 3/4)
33356G	4	TRANSITION ADAPTOR PLATE
33359A	1	12/10'0"/TRACC (UPPER GUARDRAIL)
33360A	1	12/6'10.5"/TRACC (LOWER GUARDRAIL)
33380G	1	10/END SHOE/EXTRA HOLE/BEND (LOWER)
HARDWARE		
3360G	16	5/8"ø x 1 1/4" HGR SPLICE BOLT
3435G	2	5/8"ø x 3 1/2" HGR POST BOLT
4412G	2	5/8"ø x 3" LAG SCREW
5306G	4	5/8"ø x 2 1/4" HEX HD BOLT (A325)
3391G	4	5/8"ø x 1 3/4" HEX HD BOLT (A325)
3300G	2	5/8" WASHER (F844)
3340G	16	5/8" HGR NUT
4372G	12	5/8" WASHER (F436)
3310G	4	5/8" LOCKWASHER
3361G	8	5/8" HEX NUT (A563 DH)
4688G	8	3/4"ø x 5 1/2" WEDGE ANCHOR
5138G	8	3/4"ø x 4 3/4" WEDGE ANCHOR
4699G	8	3/4" LOCKWASHER
3701G	16	3/4" WASHER
3710G	16	3/4" HEX NUT

REV.	CHK'D	BY	DATE	REMARKS
6		SAR	6-20-05	UPDATED PART NUMBERS
5		LH	6-18-02	CHANGED BLOCK POSITION ON TOP PANEL; ADDED LOWER END SHOE NOTE
4		BT	8-2-00	DELETED PC4717, PC33361 & 62, ADDED PC926 & PC33380, CHG QTY HARDWARE
3		BT	3-29-00	DELETED PC4421, ADDED PC4412
2		BT	11-5-99	DELETED PC6139, 6140, 5307 & 4441, ADDED PC6135, 6136 & 4412
1		BT	6-30-99	DELETED PC33357C & 33358, ADDED 2 MORE PC33356, CHGD SECT A-A & HDWR

TRACC

TRACC TRANSITION TO
CONCRETE SAFETY SHAPE BARRIER
PLAN, ELEVATION & SECTIONS

TRINITY INDUSTRIES, INC.
HIGHWAY SAFETY PRODUCTS
2525 STEMMONS FREEWAY, DALLAS, TX 75207

DRAWN	BT
CHECKED	
APPROVED	
DATE	05/10/02
ENG. FILE #	SS461-01E
SHT.No.	E1 OF 1
DRAWING NO.	SS 461
REV.	6

COPYRIGHT © 1999 TRINITY INDUSTRIES INC

This drawing and the information shown thereon is the sole property of TRINITY INDUSTRIES, INC. Neither the drawing nor such information is to be used for any purpose other than that for which it was specifically furnished by TRINITY INDUSTRIES, INC., nor is any reproduction authorized without written permission.

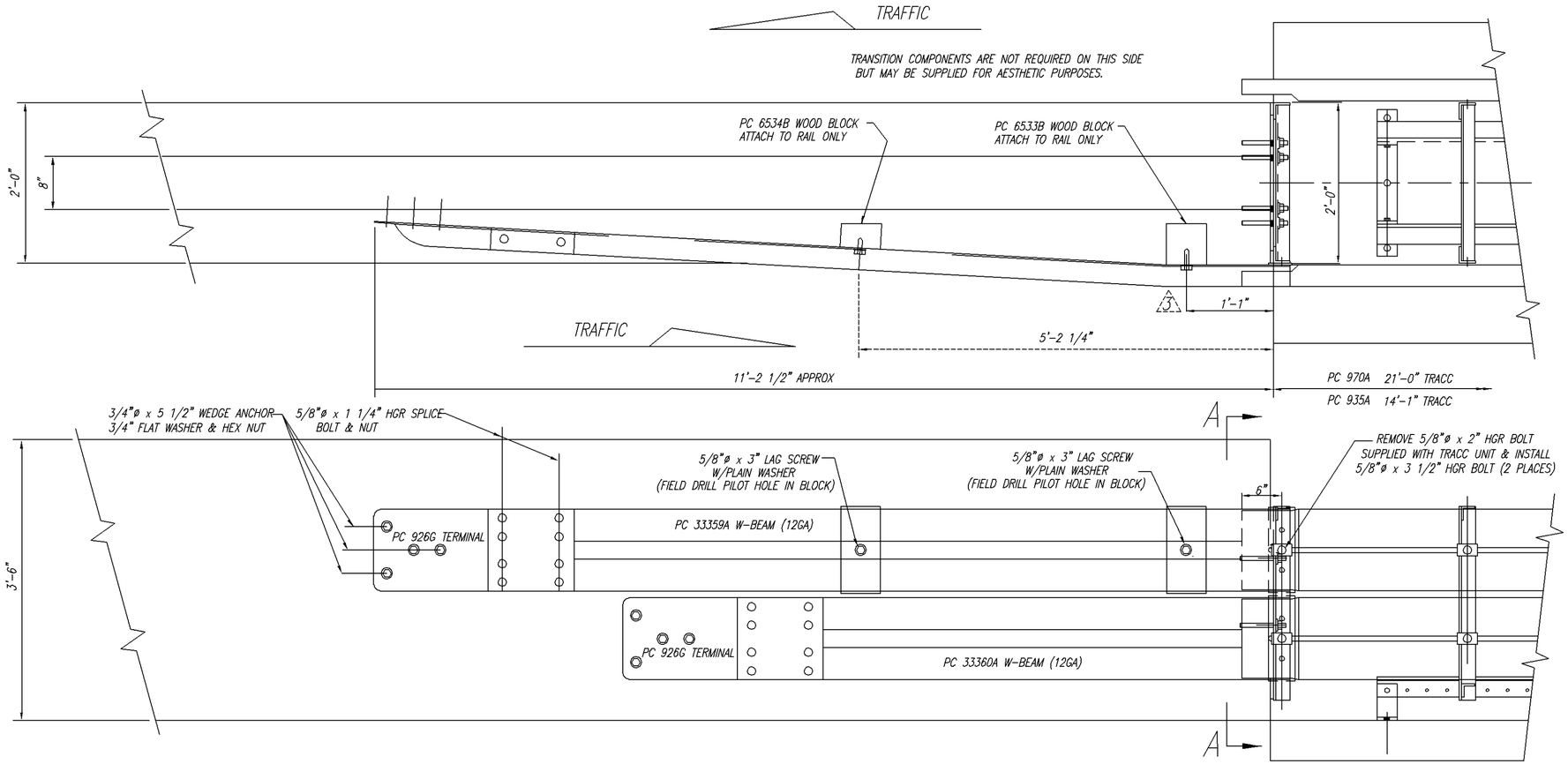

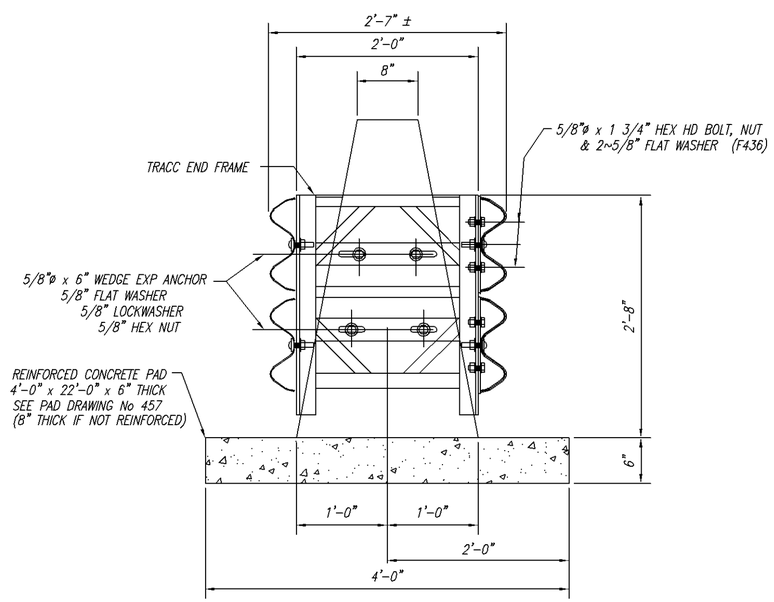

SECTION "A-A"

TRACC TRANSITION BILL OF MATERIAL

	PRODUCT CODE	QTY	DESCRIPTION
	926G	2	10/END SHOE
	6533B	1	TAPERED WD BLK 1'-1" (6 1/8 x 6)
	6534B	1	MITERED WD BLK 1'-1" (6 x 3 3/4)
	33359A	1	12/10'0"/TRACC (UPPER GUARDRAIL)
	33360A	1	12/6'10.5"/TRACC (LOWER GUARDRAIL)
			HARDWARE
	3360G	16	5/8"ø x 1 1/4" HGR SPLICE BOLT
4	3391G	4	5/8"ø x 1 3/4" HEX BOLT
	3435G	2	5/8"ø x 3 1/2" HGR POST BOLT
	4412G	2	5/8"ø x 3" LAG SCREW
	3300G	6	5/8" WASHER (F844)
	3340G	16	5/8" HGR NUT
	4372G	8	5/8" WASHER (F436)
	3310G	4	5/8" LOCKWASHER
	3361G	8	5/8" HEX NUT (A563 DH)
	4451G	4	5/8"ø x 6" WEDGE EXP ANCHOR
	4688G	8	3/4"ø x 5 1/2" WEDGE EXP ANCHOR
4	3701G	8	3/4" WASHER
4	3710G	8	3/4" HEX NUT

REV.	CHK'D	BY	DATE	REMARKS
4		LH	08/27/03	REVISED QUANTITY OF 3/4" NUTS/WASHERS
3		BT	01/29/03	CHANGED BLOCK LOCATION
2		LH	01/21/03	CHANGED BLOCKS & THEIR LOCATION ON TOP PANEL
1		BT	8-2-00	DELETED PC33361 & PC 4717, ADDED PC926, CHG QTY HARDWARE

TRACC

TRACC TRANSITION TO
CONCRETE BARRIER SINGLE SLOPE
PLAN, ELEVATION & SECTIONS

TRINITY INDUSTRIES, INC.
HIGHWAY SAFETY PRODUCTS
2525 STEMMONS FREEWAY, DALLAS, TX 75356

DRAWN	B.T.
CHECKED	
APPROVED	
DATE	11/05/99
ENG. FILE #	SS462-01E
SHT.No.	E1 OF 1
DRAWING NO.	SS 462
REV.	4

COPYRIGHT © 1999 TRINITY INDUSTRIES INC

This drawing and the information shown thereon is the sole property of TRINITY INDUSTRIES, INC. Neither the drawing nor such information is to be used for any purpose other than that for which it was specifically furnished by TRINITY INDUSTRIES, INC., nor is any reproduction authorized without written permission.

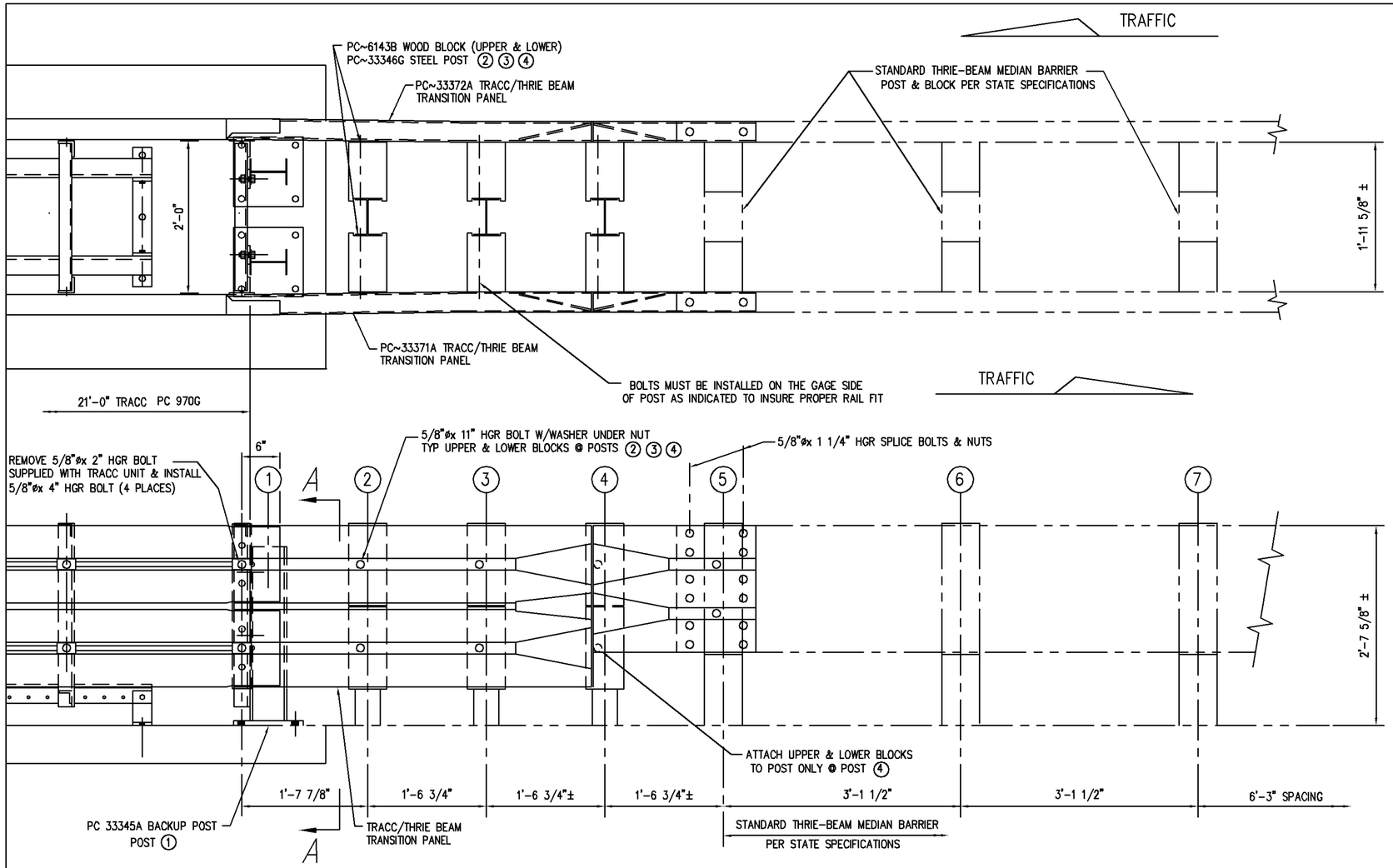

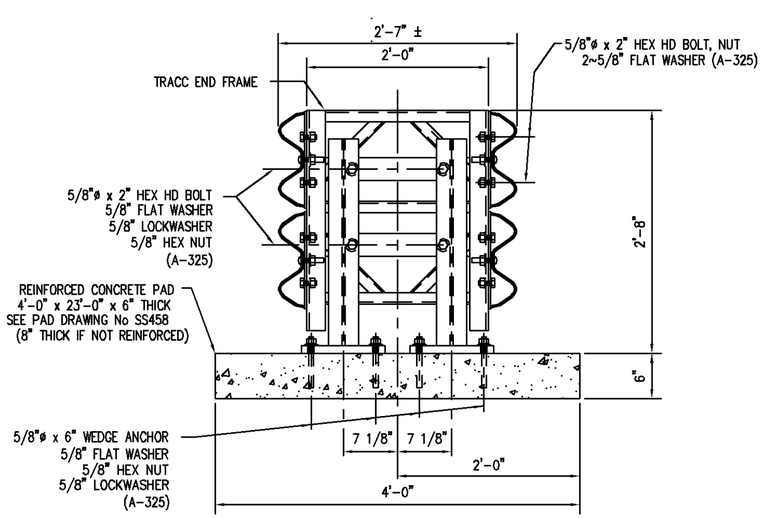

SECTION "A-A"

TRACC TRANSITION BILL OF MATERIAL

PRODUCT CODE	QTY	DESCRIPTION
33371A	1	TRACC/THRIE BEAM TRANSITION PANEL
33372A	1	TRACC/THRIE BEAM TRANSITION PANEL
6143B	12	RTD WD BLOCK 1'-1 (6 x 9 1/4)
33345A	2	BASE PL BACKUP POST (W6 x 8.5)
33346G	3	POST W6 x 8.5 x 6'-6"
		HARDWARE
4432G	4	5/8"ø x 4" HGR POST BOLT
3510G	12	5/8"ø x 11" HGR POST BOLT
3360G	24	5/8"ø x 1 1/4" HGR SPLICE BOLT
3340G	36	5/8" HGR HEX NUT
3300G	12	5/8" FLAT WASHER (@ HGR POST BOLTS)
3404G	12	5/8"ø x 2" HEX HD BOLT (A325)
4372G	20	5/8" WASHER
3310G	12	5/8" LOCKWASHER
3361G	12	5/8" HEX NUT
4451G	8	5/8"ø x 6" WEDGE ANCHOR

REV.	CHK'D	BY	DATE	REMARKS

TRACC

TRACC TRANSITION TO THRIE BEAM MEDIAN BARRIER PLAN, ELEVATION & SECTIONS

TRINITY INDUSTRIES, INC.
HIGHWAY SAFETY PRODUCTS
2525 STEMMONS FREEWAY, DALLAS, TX 75356

DRAWN	B.T.
CHECKED	
APPROVED	
DATE	11/02/99
ENG. FILE #	SS463-01E
SHT.No.	E1 OF 1
DRAWING NO.	SS 463
REV.	0

COPYRIGHT © 1999 TRINITY INDUSTRIES INC

This drawing and the information shown thereon is the sole property of TRINITY INDUSTRIES, INC. Neither the drawing nor such information is to be used for any purpose other than that for which it was specifically furnished by TRINITY INDUSTRIES, INC., nor is any reproduction authorized without written permission.

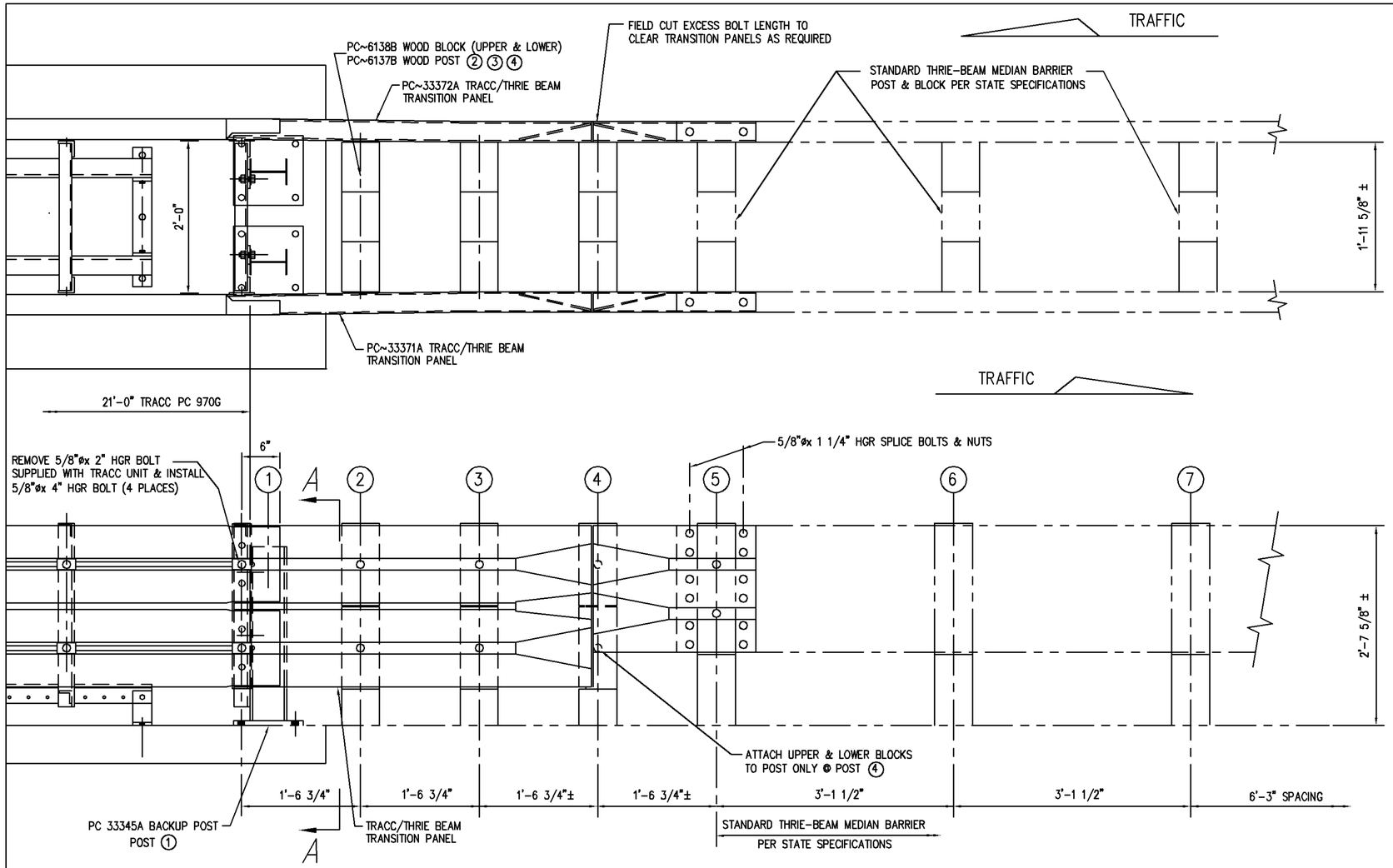

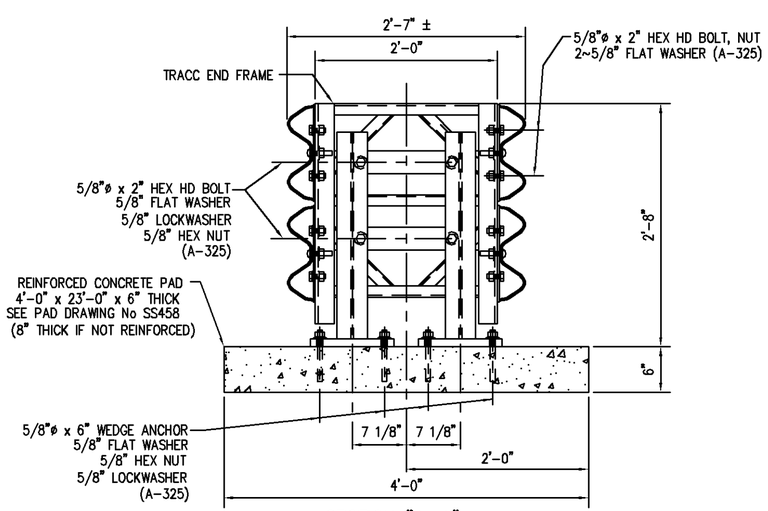

SECTION "A-A"

TRACC TRANSITION BILL OF MATERIAL

PRODUCT CODE	QTY	DESCRIPTION
33371A	1	TRACC/THRIE BEAM TRANSITION PANEL
33372A	1	TRACC/THRIE BEAM TRANSITION PANEL
6138B	12	WD BLOCK 1'-1 (6" x 8")
33345A	2	BASE PL BACKUP POST (W6 x 8.5)
6137B	3	WD POST 6" x 8" x 6'-6"
HARDWARE		
4432G	4	5/8"ø x 4" HGR POST BOLT
3660G	6	5/8"ø x 26" HGR POST BOLT
3360G	24	5/8"ø x 1 1/4" HGR SPLICE BOLT
3340G	30	5/8" HGR HEX NUT
3300G	6	5/8" FLAT WASHER (@ HGR POST BOLTS)
3404G	12	5/8"ø x 2" HEX HD BOLT (A325)
4372G	20	5/8" WASHER
3310G	12	5/8" LOCKWASHER
3361G	12	5/8" HEX NUT
4451G	8	5/8"ø x 6" WEDGE ANCHOR

REV.	CHK'D	BY	DATE	REMARKS

TRACC

TRACC TRANSITION TO
THRIE BEAM MEDIAN BARRIER ALL WOOD POST

DRAWN	DJB
CHECKED	D.D.
APPROVED	
DATE	11-2-99
ENG. FILE #	SS464-01E
SHT.No.	E1 OF 1
DRAWING NO.	SS 464
REV.	0

TRINITY INDUSTRIES, INC.
HIGHWAY SAFETY PRODUCTS
2525 STEMMONS FREEWAY, DALLAS, TX 75356

COPYRIGHT © 1999 TRINITY INDUSTRIES INC

This drawing and the information shown thereon is the sole property of TRINITY INDUSTRIES, INC. Neither the drawing nor such information is to be used for any purpose other than that for which it was specifically furnished by TRINITY INDUSTRIES, INC., nor is any reproduction authorized without written permission.

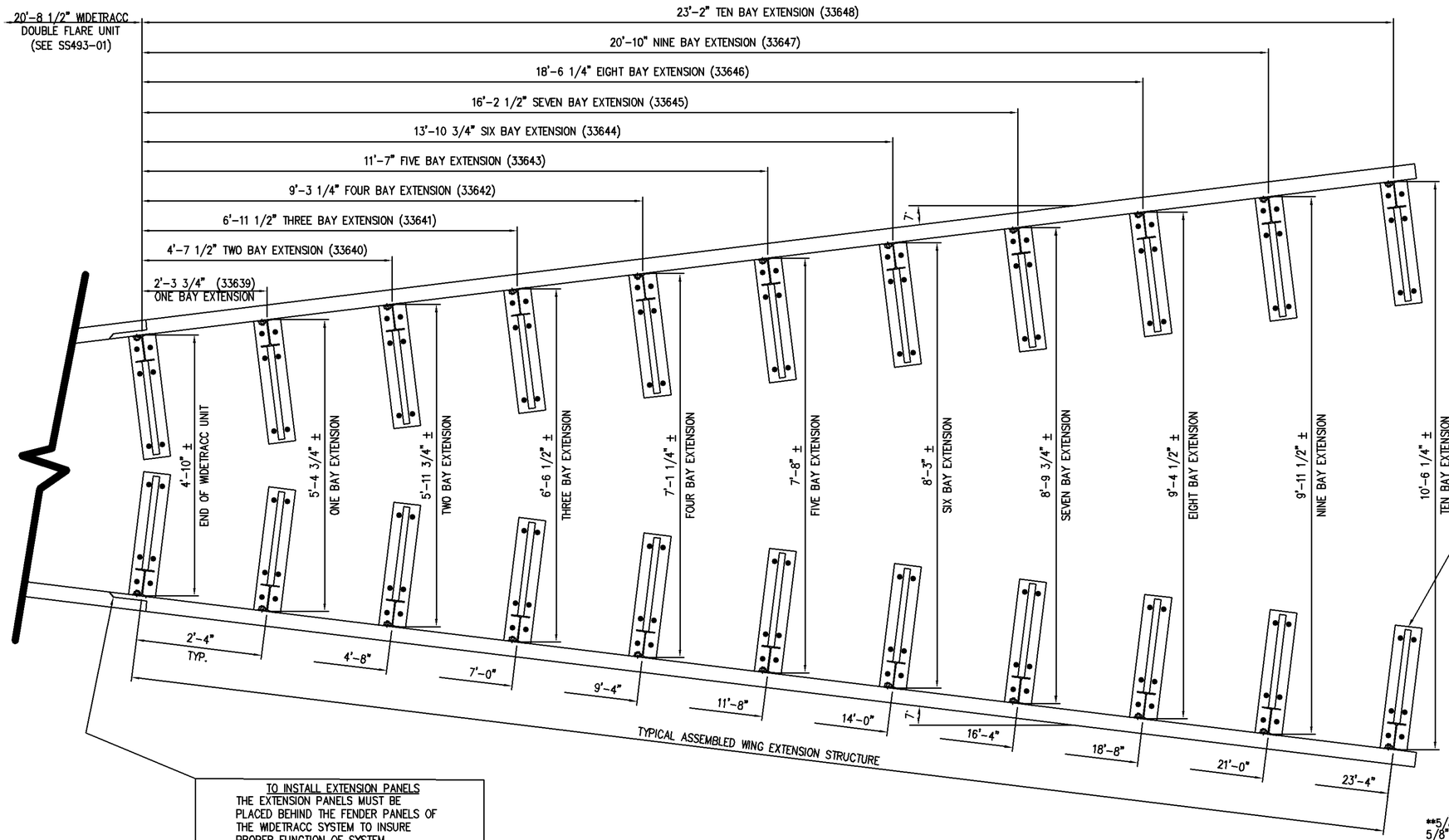

TO INSTALL EXTENSION PANELS
THE EXTENSION PANELS MUST BE PLACED BEHIND THE FENDER PANELS OF THE WIDETRACC SYSTEM TO INSURE PROPER FUNCTION OF SYSTEM.

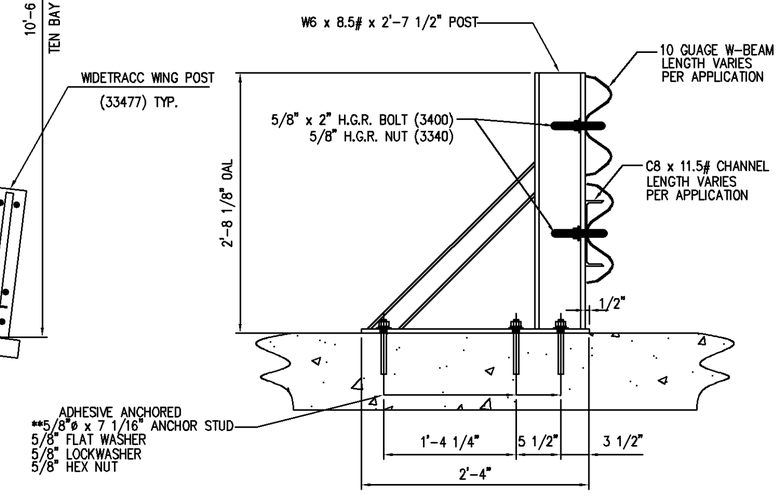

SECTION A-A
(P.C. 33477)

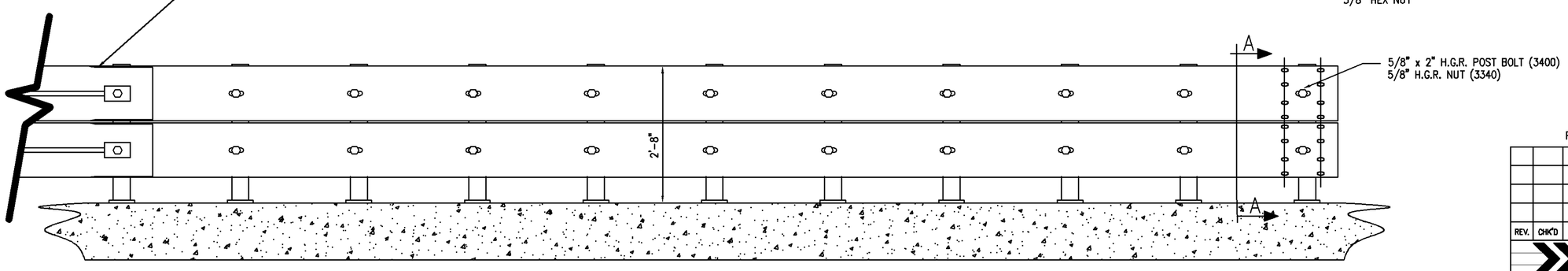

FOR BILL OF MATERIALS: SEE SHEET E2 OF 2

REV.	CHK'D	BY	DATE	REMARKS

TRACC

WIDETRACC DOUBLE FLARE WING EXTENSION STRUCTURES

CRASH-CUSHION ATTENUATING TERMINAL PLAN, ELEVATION

TRINITY INDUSTRIES, INC.
HIGHWAY SAFETY PRODUCTS
2525 STEMMONS FREEWAY, DALLAS, TX 75207

DRAWN	L. H.
CHECKED	B.T.
APPROVED	
DATE	11-22-02
ENG. FILE #	SS497-01E
SHT.No.	E1 OF 2
DRAWING NO.	SS 497
REV.	0

COPYRIGHT © 2002 TRINITY INDUSTRIES INC
This drawing and the information shown thereon is the sole property of TRINITY INDUSTRIES, INC. Neither the drawing nor such information is to be used for any purpose other than that for which it was specifically furnished by TRINITY INDUSTRIES, INC., nor is any reproduction authorized without written permission.

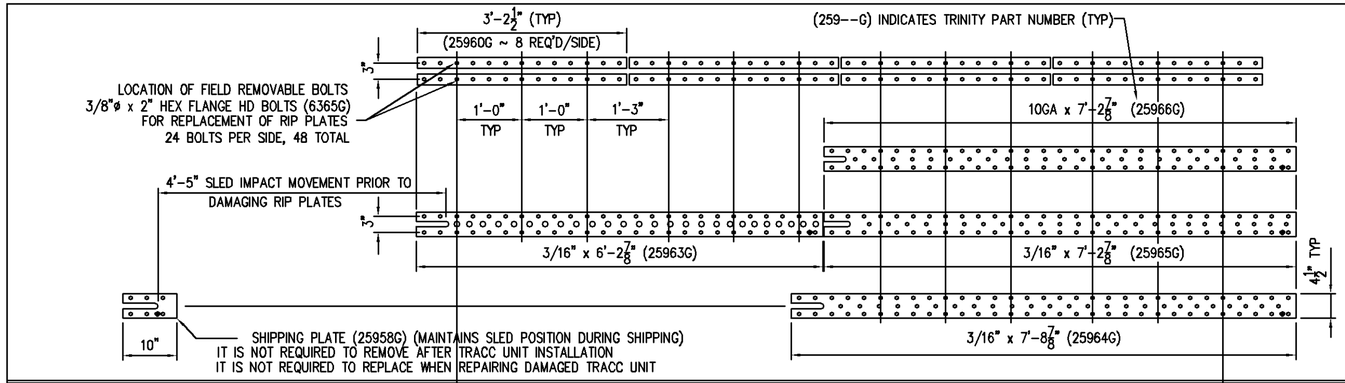

LAYOUT SCHEMATIC, TOP VIEW
RIP PLATES FOR ONE
SIDE OF TRACC BASE

EACH TRACC UNIT SHIPS 100 % ASSEMBLED
(PLASTIC NOSE INSTALLED AFTER PLACEMENT)

TRACC BILL OF MATERIAL

PART NUMBER	QTY	DESCRIPTION
25980A	1	TRACC UNIT (FULLY ASSEMBLED)
6825B	4	REFLECTIVE TAPE
6532B	1	PLASTIC NOSEPIECE
** ANCHOR HARDWARE (FULL CONCRETE BASE)		
5204G	26	5/8" x 7 1/16" ANCHOR STUD
3310G	26	5/8" LOCKWASHER
3361G	26	5/8" HEX NUT
3300G	26	5/8" FLAT WASHER
☆ 5206B	3	ADHESIVE HIT HY 150(CARTRIDGE)
** ANCHOR HARDWARE (ASPHALT BASE)		
6380G	26	5/8" x 18" ALL THD ROD
3310G	26	5/8" LOCKWASHER
3361G	26	5/8" HEX NUT
3300G	26	5/8" FLAT WASHER
☆ 5206B	5	ADHESIVE HIT HY 150(CARTRIDGE)

☆ EACH CARTRIDGE INCLUDES 1 EACH:
MIXER HY 150 CARTRIDGE (NOZZLE)
FILLER HIT HY 150 (FILLER TUBE)

** SEE PRODUCT MANUAL

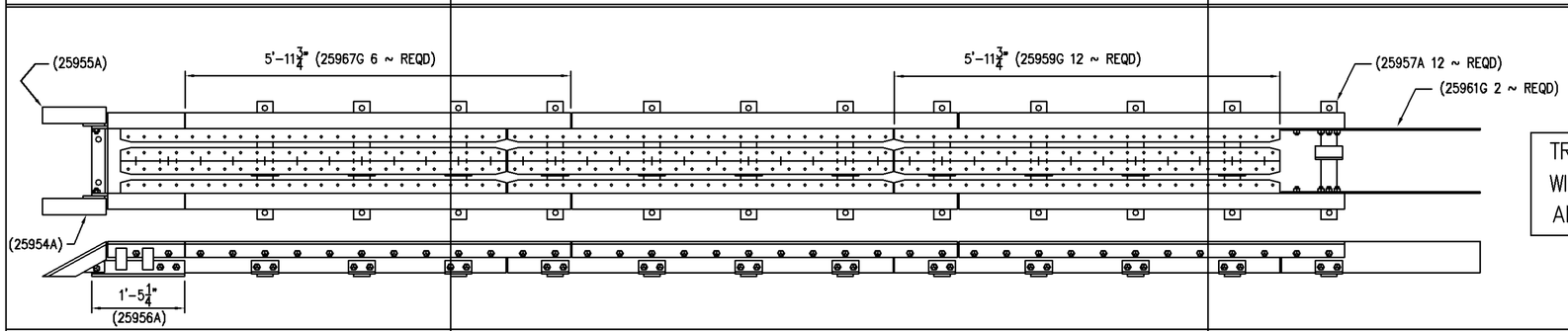

TRACC BASE ASSEMBLY
WITHOUT RIP PLATES
AND DOUBLER PLATES

FOUNDATION NOTE:

6" REINFORCED CONCRETE PAD IS SHOWN
OTHER OPTIONS ARE :

a) 8" THICK MINIMUM UNREINFORCED CONCRETE
b) 8" MINIMUM THICK ASPHALT
c) 3" THICK (MIN) ASPHALT OVER 3" (MIN) CONCRETE
d) 6" THICK ASPHALT OVER 6" COMPACTED SUBBASE.

OPTIONAL TRACC ANCHOR ITEMS

PART NUMBER	DESCRIPTION
5205B	ADHESIVE DISPENSER
5207B	MIXER HIT HY150 (NOZZLE)
5208B	FILLER HIT HY150 (FILLER TUBE)
5209B	BIT TE-C+ 11/16-18 (11/16"ø BIT)

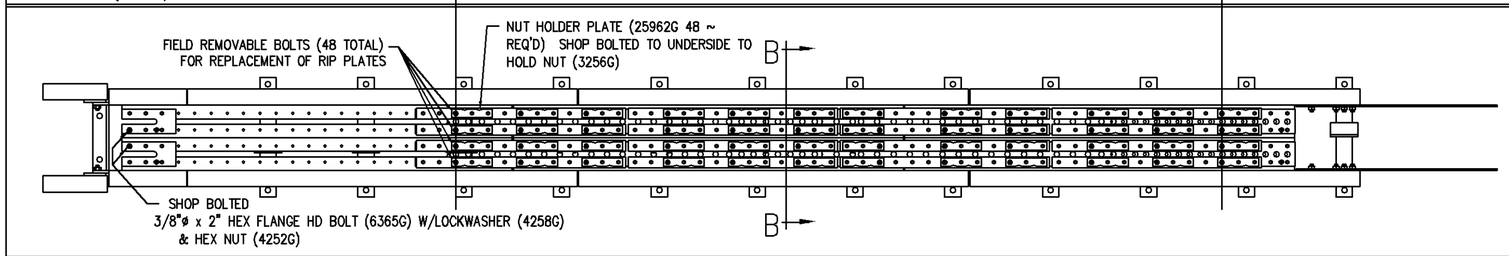

COMPLETE TRACC BASE ASSEMBLY (25981A)
WITH RIP PLATES AND DOUBLERS

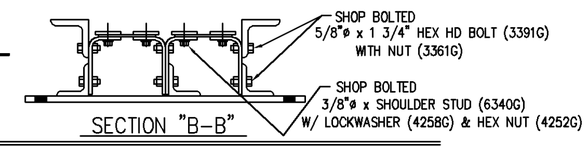

SECTION "B-B"

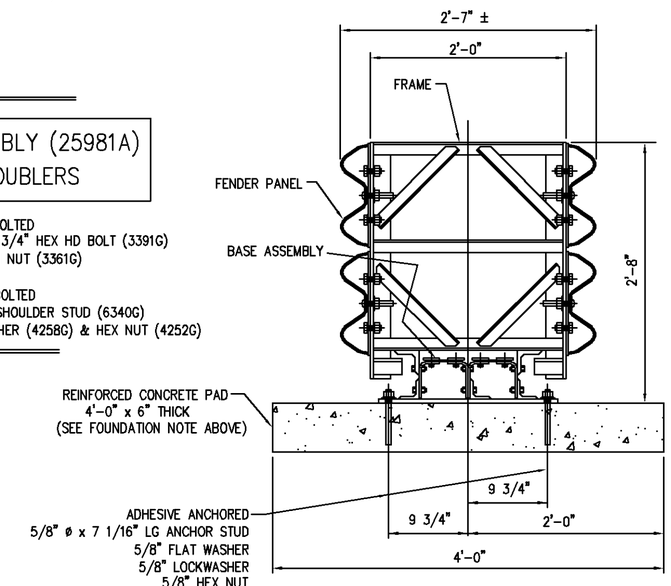

SECTION "A-A"

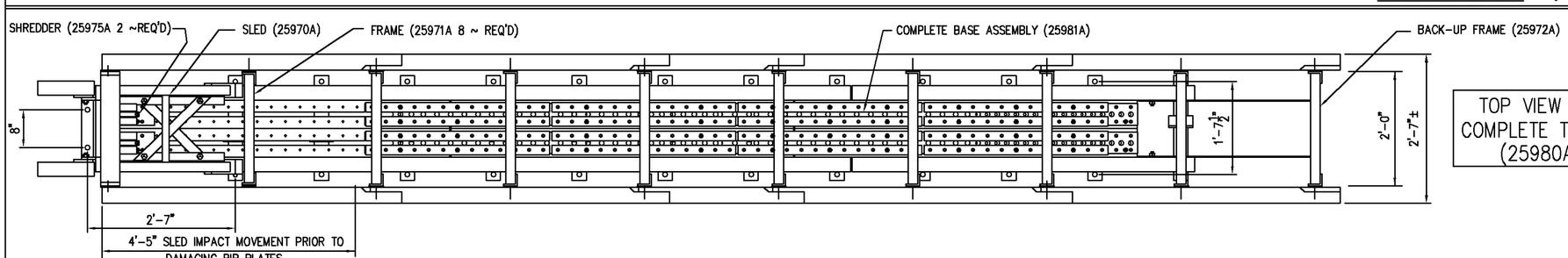

TOP VIEW OF
COMPLETE TRACC
(25980A)

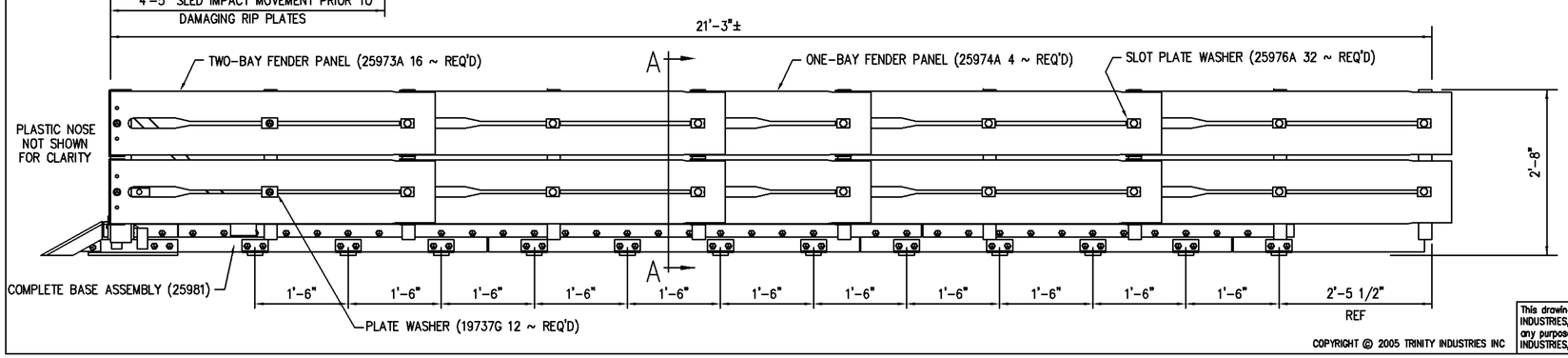

SIDE VIEW OF
COMPLETE TRACC
(25980A)

REV.	CHK'D	BY	DATE	REMARKS
2		SAR	6-17-05	UPDATED PART NUMBERS
1		BT	4-7-05	UPDATED WITH PART NUMBERS & PAD INFO

TRACC

TRACC
CRASH-CUSHION ATTENUATING TERMINAL
PLAN, ELEVATION, & SECTION
ASSEMBLED UNIT, BASE & RIP PLATE SCHEMATIC

TRINITY INDUSTRIES, INC.
HIGHWAY SAFETY PRODUCTS
2525 STEMMONS FREEWAY, DALLAS, TX 75207

DRAWN	BJ / BT
CHECKED	
APPROVED	
DATE	03/30/05
ENG. FILE #	SS1000-01E
SHT.No.	E1 OF 1
DRAWING NO.	SS 1000
REV.	2

This drawing and the information shown thereon is the sole property of TRINITY INDUSTRIES, INC. Neither the drawing nor such information is to be used for any purpose other than that for which it was specifically furnished by TRINITY INDUSTRIES, INC., nor is any reproduction authorized without written permission.

COPYRIGHT © 2005 TRINITY INDUSTRIES INC

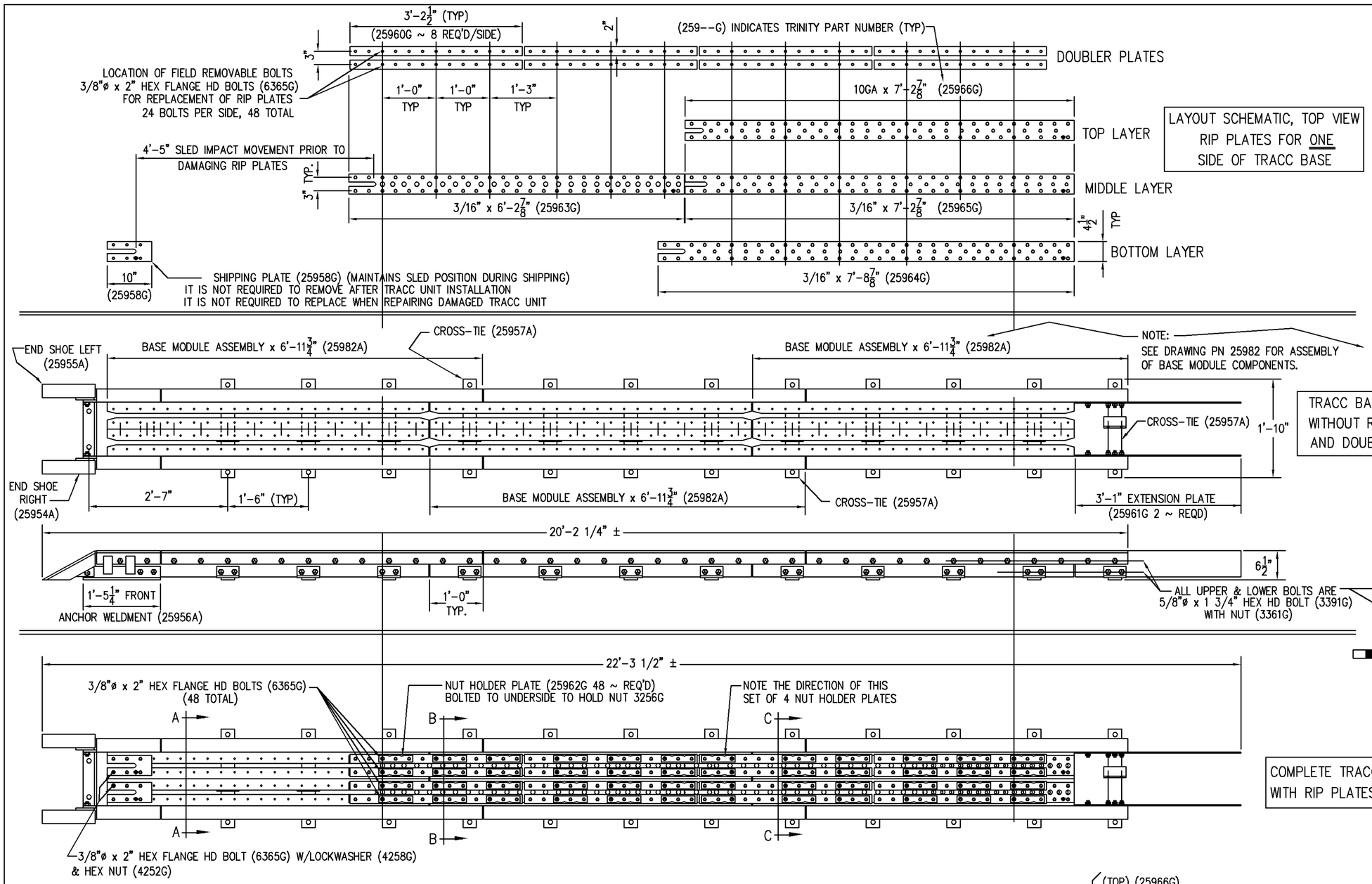

LAYOUT SCHEMATIC, TOP VIEW
RIP PLATES FOR ONE
SIDE OF TRACC BASE

TRACC BASE (25981A) BILL OF MATERIALS				
Part #	Description	Qty	WT. EACH (#)	TOTAL WT.
03256G	3/8" Shoulder Nut	48	0.030	1.44
03361G	5/8" Heavy Hex Nut (A563 DH)	40	0.120	4.8
03391G	5/8" x 1 3/4" Hex Head Bolt (A325)	40	0.210	8.4
04252G	3/8" Hex Nut	180	0.030	5.4
04258G	3/8" Lock Washer	180	0.006	1.08
06340G	3/8" X 1 1/2" Shoulder Stud	178	0.060	10.68
06365G	3/8" x 2" Hex Flange Head Bolt (GR-5)	50	0.070	3.5
25954A	End Shoe, Right	1	11.000	11
25955A	End Shoe, Left	1	11.000	11
25956A	Front Anchor Weldment	1	67.000	67
25957A	Cross Tie	3	18.000	54
25958G	Rip Plate, Stage 1(Shipping Plate)	2	0.800	1.6
25960G	Doublers	16	8.000	128
25961G	Extension Plate, Rear	2	16.000	32
25962G	Nut Holder (Nut Retainer Plate)	48	0.500	24
25963G	Rip Plate, Stage 2	2	17.000	34
25964G	Rip Plate, Stage 3, Bottom	2	22.000	44
25965G	Rip Plate, Stage 3, Middle	2	20.000	40
25966G	Rip Plate, Stage 3, Top	2	15.000	30
25982A	Base Module Assembly	3	329.000	987
		TOTAL WEIGHT		1498.90

TRACC BASE ASSEMBLY
WITHOUT RIP PLATES
AND DOUBLER PLATES

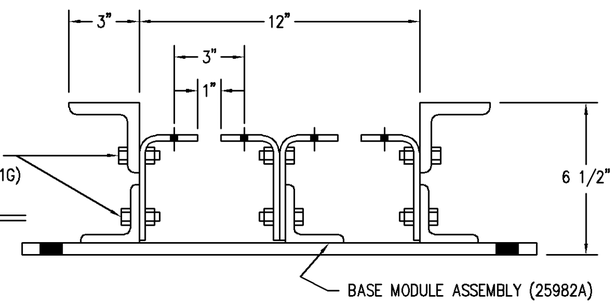

SECTION "A-A"

COMPLETE TRACC BASE ASSEMBLY
WITH RIP PLATES AND DOUBLERS

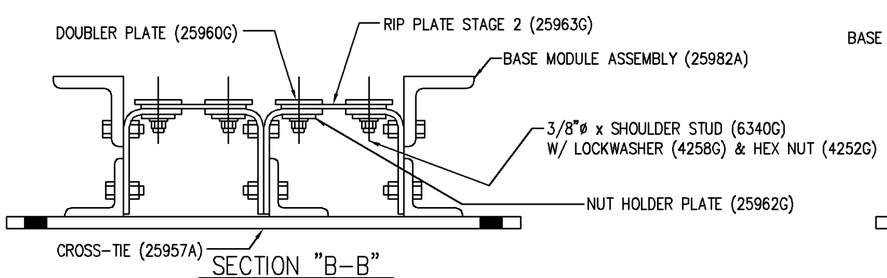

SECTION "B-B"

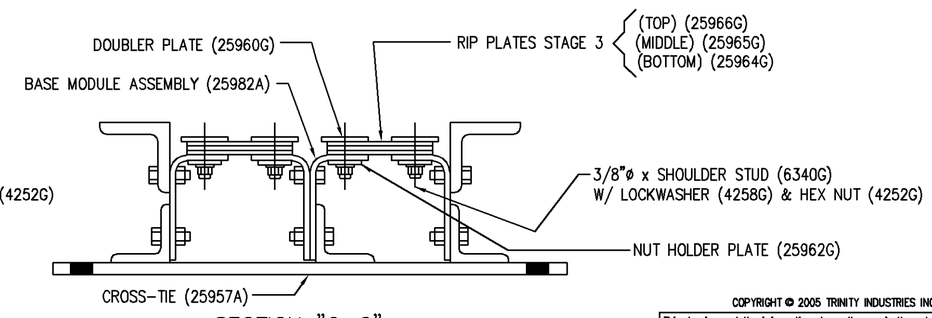

SECTION "C-C"

COPYRIGHT © 2005 TRINITY INDUSTRIES INC
This drawing and the information shown thereon is the sole property of TRINITY INDUSTRIES, INC. Neither the drawing nor such information is to be used for any purpose other than that for which it was specifically furnished by TRINITY INDUSTRIES, INC., nor is any reproduction authorized without written permission.

REV.	CHK'D	BY	DATE	REMARKS
2		SAR	6/17/05	UPDATED PART NUMBERS
1	SG	BT	5/13/05	REPLACED BEAM GUIDES & BASE ANGLES WITH BASE MODULES

TRACC

TRACC
CRASH-CUSHION ATTENUATING TERMINAL
ASSEMBLED BASE UNIT
PN 25981

TRINITY INDUSTRIES, INC.
HIGHWAY SAFETY PRODUCTS
2525 STEMMONS FREEWAY, DALLAS, TX 75207

DRAWN	BT/LH
CHECKED	B.T.
APPROVED	
DATE	04/22/05
ENG. FILE #	SS1001-01E
SHT.No.	E1 OF 1
DRAWING NO.	SS 1001/PN 25981
REV.	2

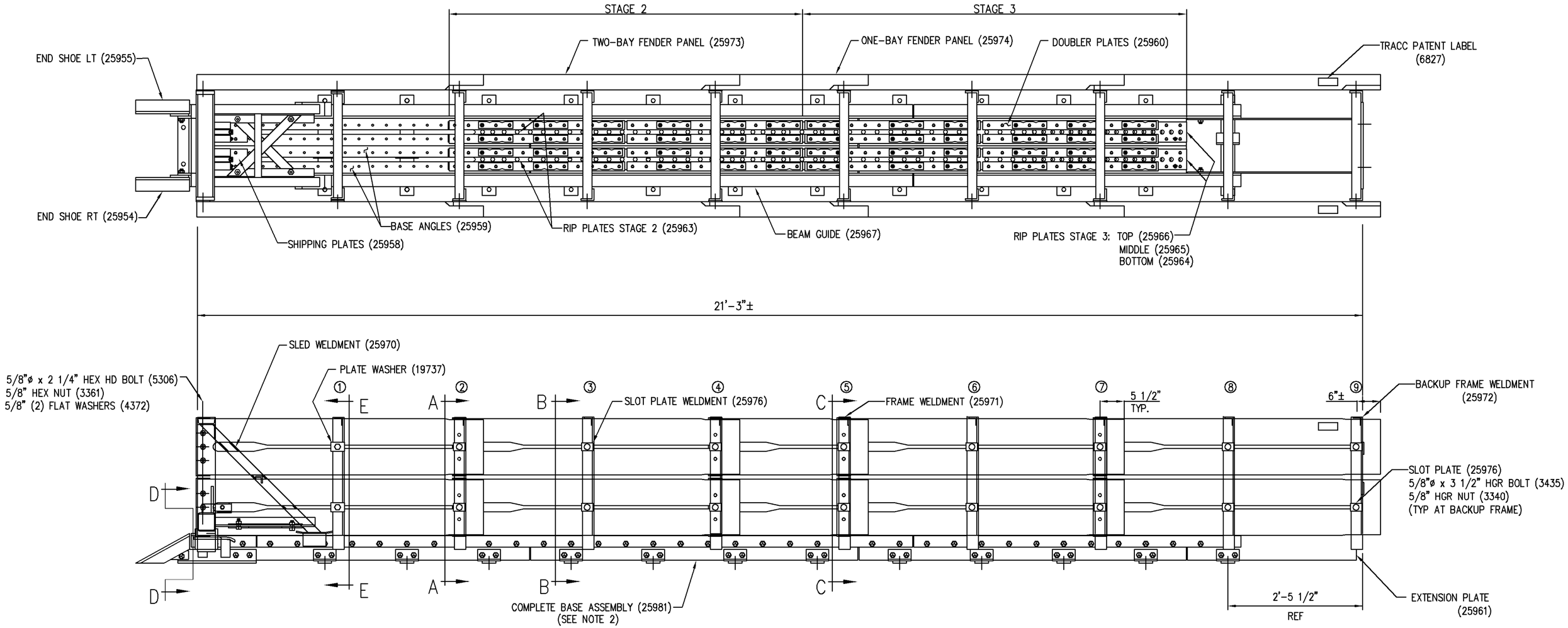

TRACC BILL OF MATERIAL (PN 25980)			
PART NUMBER	QTY	DESCRIPTION	WT/EA
19737G	12	1/4"x3"x2 1/4"TRACC WSHR	0.5#
25970A	1	SLED WELDMENT	185#
25971A	8	FRAME WELDMENT	60#
25972A	1	BACKUP FRAME WELDMENT	74#
25973A	16	TWO – BAY FENDER PANEL	49#
25974A	4	ONE – BAY FENDER PANEL	28#
25975A	2	SHREDDER ASSEMBLY	6#
25976A	32	SLOT PLATE	0.4#
25981A	1	ASSEMBLED BASE(NOTE 2)	1499#
TOTAL WEIGHT (EXCLUDES SHOP HRDWR)			3165#

SHOP HARDWARE (GALV A153)			
PART NUMBER	QTY	DESCRIPTION	MATL SPEC
3253G	2	HITCH PIN CLIP	
3340G	32	5/8" HGR NUT	A563 GR A
3361G	46	5/8" HEX NUT	A563 GR DH
3391G	32	5/8"ø x 1 3/4" HEX HD BOLT	A325
3400G	12	5/8"ø x 2" HGR BOLT	A307 GR A
3435G	20	5/8"ø x 3 1/2" HGR BOLT	A307 GR A
4372G	88	5/8" FLAT WASHER	F436
4425G	2	3/4" X 2" CLEVIS PIN	
5306G	14	5/8"ø x 2 1/4" HEX HD BOLT	A325
6827B	2	TRACC PATENT LABEL	

NOTES:
1.) FOR SECTIONAL VIEWS SEE SHEET E2 OF 2.
2.) SEE DRAWING SS1001 (PN 25981) FOR ASSEMBLY OF ALL BASE COMPONENTS.

REV.	CHK'D	BY	DATE	REMARKS
1		SAR	6/18/05	FIXED WEIGHT & ADDED STAGES 2 & 3

TRACC

TRACC
CRASH–CUSHION ATTENUATING TERMINAL
PLAN, ELEVATION, & SECTION
SHOP ASSEMBLY DETAILS
PN 25980

TRINITY INDUSTRIES, INC.
HIGHWAY SAFETY PRODUCTS
2525 STEMMONS FREEWAY, DALLAS, TX 75207

DRAWN	LH
CHECKED	BT
APPROVED	
DATE	05/11/05
ENG. FILE #	SS1002–01E
SHT.No.	E1 OF 2
DRAWING NO.	SS 1002/PN 25980
REV.	1

This drawing and the information shown thereon is the sole property of TRINITY INDUSTRIES, INC. Neither the drawing nor such information is to be used for any purpose other than that for which it was specifically furnished by TRINITY INDUSTRIES, INC., nor is any reproduction authorized without written permission.

COPYRIGHT © 2005 TRINITY INDUSTRIES INC

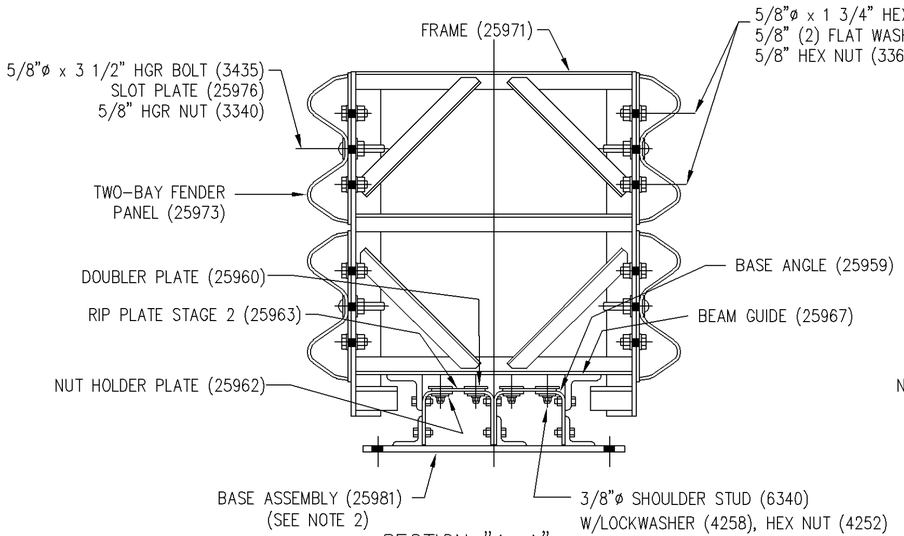

SECTION "A-A"

FRAME ② SHOWN
FRAME ④ SIMILAR

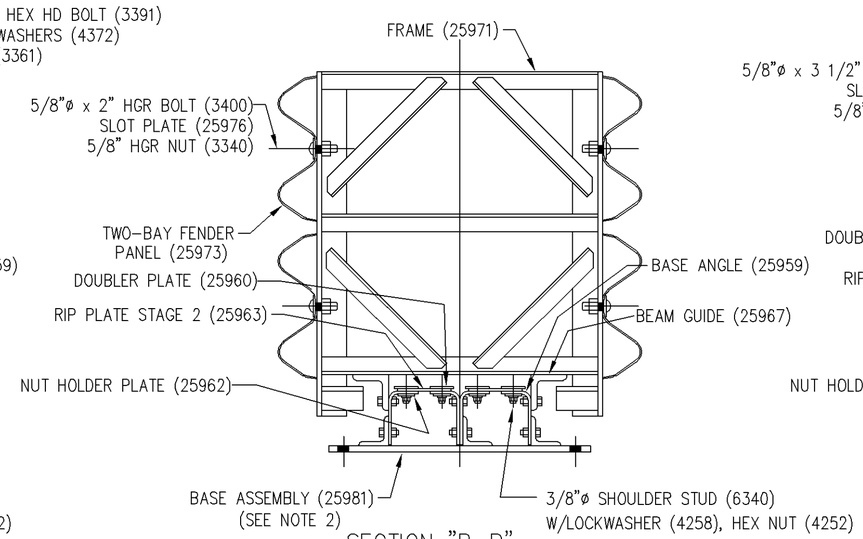

SECTION "B-B"

FRAME ③ SHOWN
FRAME ⑥ & ⑧ SIMILAR

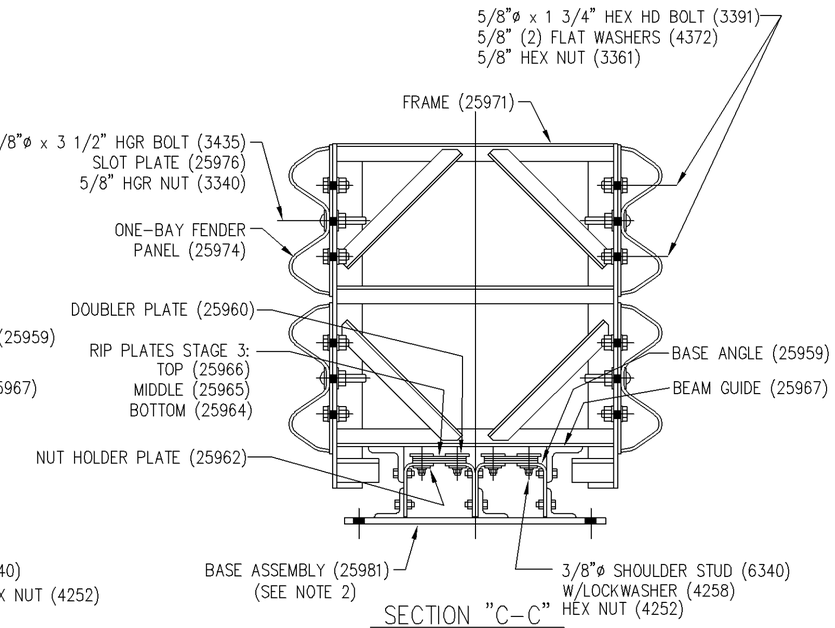

SECTION "C-C"

FRAME ⑤ SHOWN
FRAME ⑦ SIMILAR

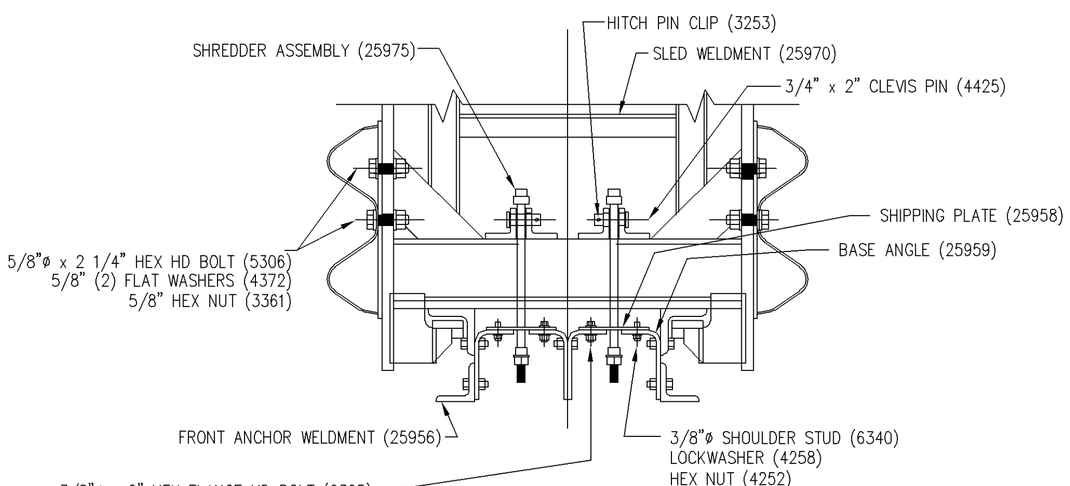

SECTION "D-D"

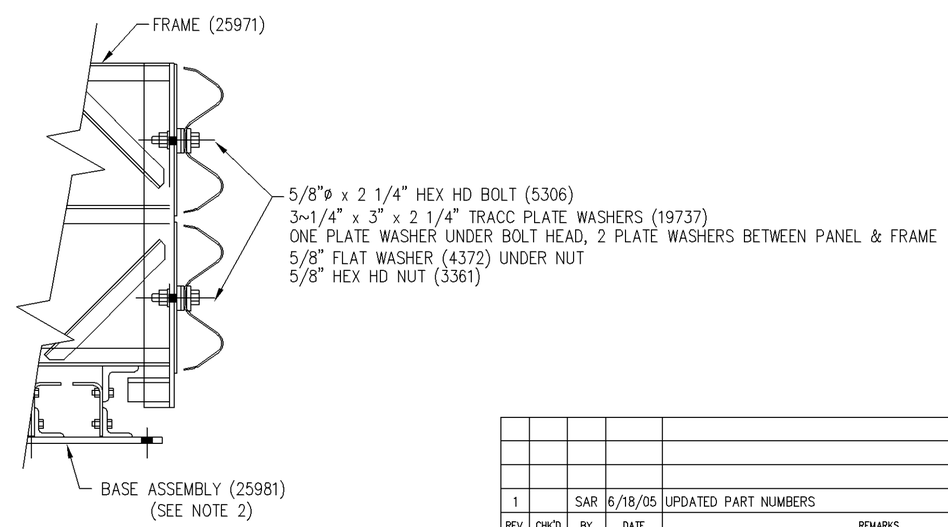

SECTION "E-E"

FRAME ① SHOWN

NOTES:

1.) FOR PLAN & ELEVATION VIEW SEE SHEET E1 OF 2.
2.) SEE DRAWING SS1001 (PN 25981) FOR ASSEMBLY OF ALL BASE COMPONENTS.

COPYRIGHT ©2005 TRINITY INDUSTRIES INC
This drawing and the information shown thereon is the sole property of TRINITY INDUSTRIES, INC. Neither the drawing nor such information is to be used for any purpose other than that for which it was specifically furnished by TRINITY INDUSTRIES, INC., nor is any reproduction authorized without written permission.

REV.	CHK'D	BY	DATE	REMARKS
1		SAR	6/18/05	UPDATED PART NUMBERS

TRACC

TRACC
CRASH-CUSHION ATTENUATING TERMINAL
PLAN, ELEVATION & SECTIONS
SHOP ASSEMBLY DETAILS
PN 25980

TRINITY INDUSTRIES, INC.
HIGHWAY SAFETY PRODUCTS
2525 STEMMONS FREEWAY, DALLAS, TX 75207

DRAWN	L. H.
CHECKED	B.T.
APPROVED	
DATE	05/11/05
ENG. FILE #	SS1002-02E
SHT.No.	E2 OF 2
DRAWING NO.	SS 1002/PN 25980
REV.	1

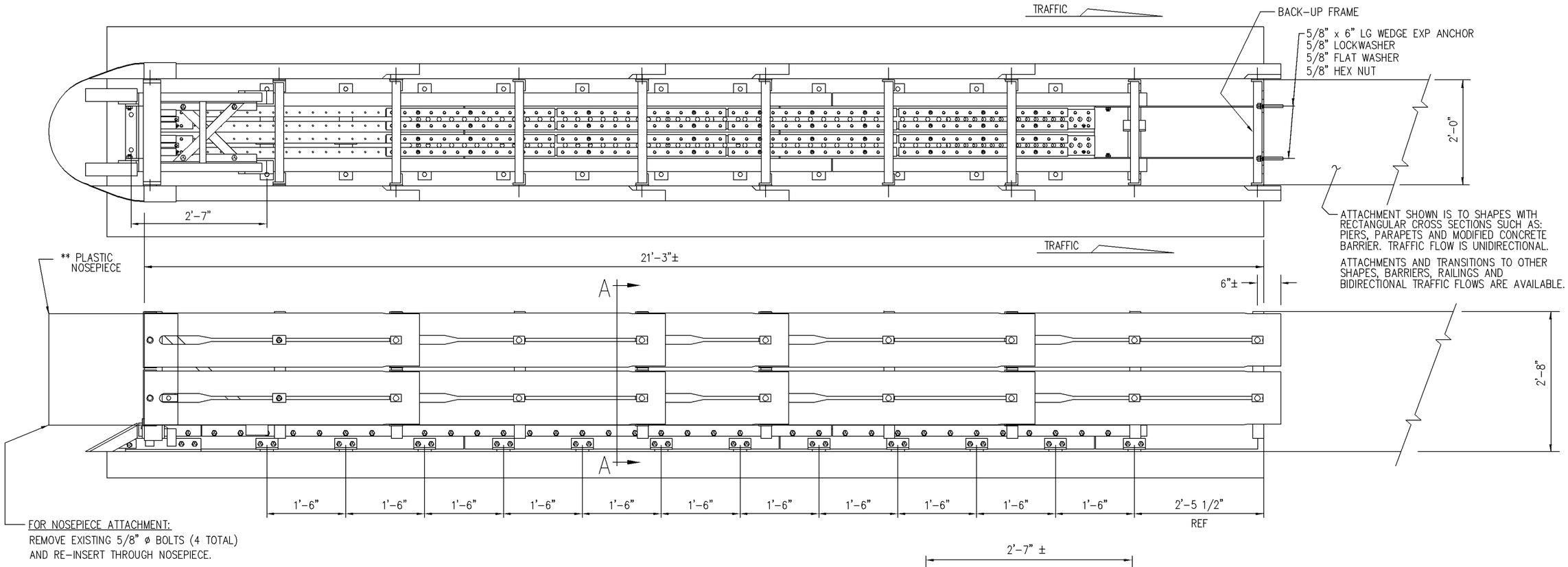

TRACC BILL OF MATERIAL		
PART NUMBER	QTY	DESCRIPTION
25980A	1	TRACC UNIT (FULLY ASSEMBLED)
3310G	4	5/8" LOCKWASHER
4451G	4	5/8" x 6" WEDGE EXP ANCHOR
6825B	4	REFLECTIVE TAPE
6532B	1	PLASTIC NOSEPIECE
** ANCHOR HARDWARE (FULL CONCRETE BASE)		
5204G	26	5/8" x 7 1/16" ANCHOR STUD
3310G	26	5/8" LOCKWASHER
3361G	26	5/8" HEX NUT
3300G	26	5/8" FLAT WASHER
☆ 5206B	3	ADHESIVE HIT HY 150(CARTRIDGE)
** ANCHOR HARDWARE (ASPHALT BASE)		
6380G	26	5/8" x 18" ALL THD ROD
3310G	26	5/8" LOCKWASHER
3361G	26	5/8" HEX NUT
3300G	26	5/8" FLAT WASHER
☆ 5206B	5	ADHESIVE HIT HY 150(CARTRIDGE)

EACH TRACC UNIT SHIPS 100 % ASSEMBLED (PLASTIC NOSE INSTALLED AFTER PLACEMENT)

** SEE PRODUCT MANUAL

☆ EACH CARTRIDGE INCLUDES 1 EACH: MIXER HY 150 CARTRIDGE (NOZZLE)
FILLER HIT HY 150 (FILLER TUBE)

OPTIONAL TRACC ANCHOR ITEMS	
PART NUMBER	DESCRIPTION
5205B	ADHESIVE DISPENSER
5207B	MIXER HIT HY150 (NOZZLE)
5208B	FILLER HIT HY150 (FILLER TUBE)
5209B	BIT TE-C+ 11/16-18 (11/16"ø BIT)

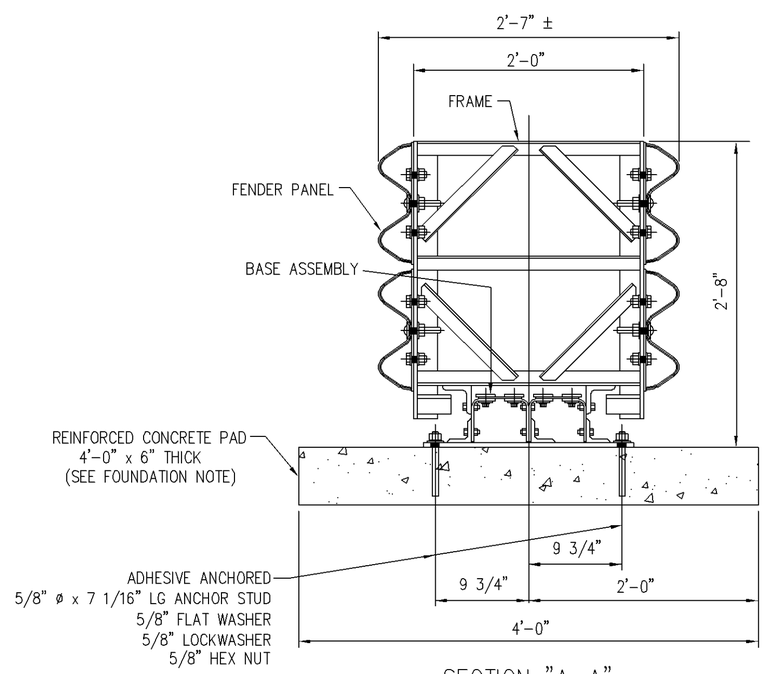

SECTION "A-A"

FOUNDATION NOTE:

6" REINFORCED CONCRETE PAD IS SHOWN
OTHER OPTIONS ARE :

a) 8" THICK MINIMUM UNREINFORCED CONCRETE
b) 8" MINIMUM THICK ASPHALT
c) 3" THICK (MIN) ASPHALT OVER 3" (MIN) CONCRETE
d) 6" THICK ASPHALT OVER 6" COMPACTED SUBBASE.

REV.	CHK'D	BY	DATE	REMARKS

TRACC

TRACC
CRASH-CUSHION ATTENUATING TERMINAL
PLAN, ELEVATION & SECTIONS
(UNIDIRECTIONAL, DIRECT ATTACHMENT)

TRINITY INDUSTRIES, INC.
HIGHWAY SAFETY PRODUCTS
2525 STEMMONS FREEWAY, DALLAS, TX 75207

DRAWN	BT/LH
CHECKED	B.T.
APPROVED	
DATE	04/25/05
ENG. FILE #	SS1003-01E
SHT.No.	E1 OF 1
DRAWING NO.	SS 1003
REV.	0

COPYRIGHT © 2005 TRINITY INDUSTRIES INC
This drawing and the information shown thereon is the sole property of TRINITY INDUSTRIES, INC. Neither the drawing nor such information is to be used for any purpose other than that for which it was specifically furnished by TRINITY INDUSTRIES, INC., nor is any reproduction authorized without written permission.

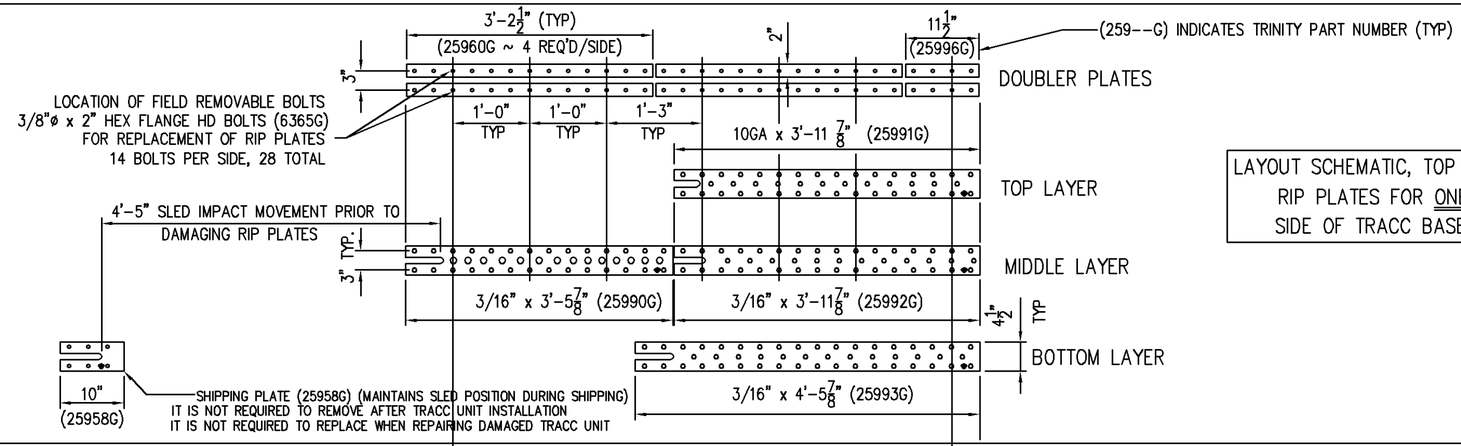

LAYOUT SCHEMATIC, TOP VIEW
RIP PLATES FOR ONE
SIDE OF TRACC BASE

SHORTRACC BASE (25994A) BILL OF MATERIALS

Part #	Description	Qty	WT. EACH (#)	TOTAL WT.
03256G	3/8" Shoulder Nut	28	0.03	0.84
03361G	5/8" Heavy Hex Nut (A563 DH)	30	0.12	3.6
03391G	5/8" x 1 3/4" Hex Head Bolt (A325)	30	0.21	6.3
04252G	3/8" Hex Nut	104	0.03	3.12
04258G	3/8" Lock Washer	104	0.006	0.624
06340G	3/8" X 1 1/2" Shoulder Stud	102	0.06	6.12
06365G	3/8" x 2" Hex Flange Head Bolt (GR-5)	30	0.07	2.1
25954A	End Shoe, Right	1	11.0	11
25955A	End Shoe, Left	1	11.0	11
25956A	Front Anchor Weldment	1	67.0	67
25957A	Cross Tie	2	18.0	36
25958G	Rip Plate, Stage 1(Shipping Plate)	2	0.80	1.6
25960G	Doublers	8	8.0	64
25962G	Nut Holder (Nut Retainer Plate)	28	0.50	14
25982A	Base Module Assembly	2	329	658
25990G	Rip Plate, Stage 2	2	9.0	18
25991G	Rip Plate, Stage 3, Top	2	8.0	16
25992G	Rip Plate, Stage 3, Middle	2	11.0	22
25993G	Rip Plate, Stage 3, Bottom	2	12.0	24
25995G	Extension Plate, Rear	2	11.0	22
25996G	Doubler Plate, Stage 3 (11 1/2")	4	2.5	10
		TOTAL WEIGHT		997

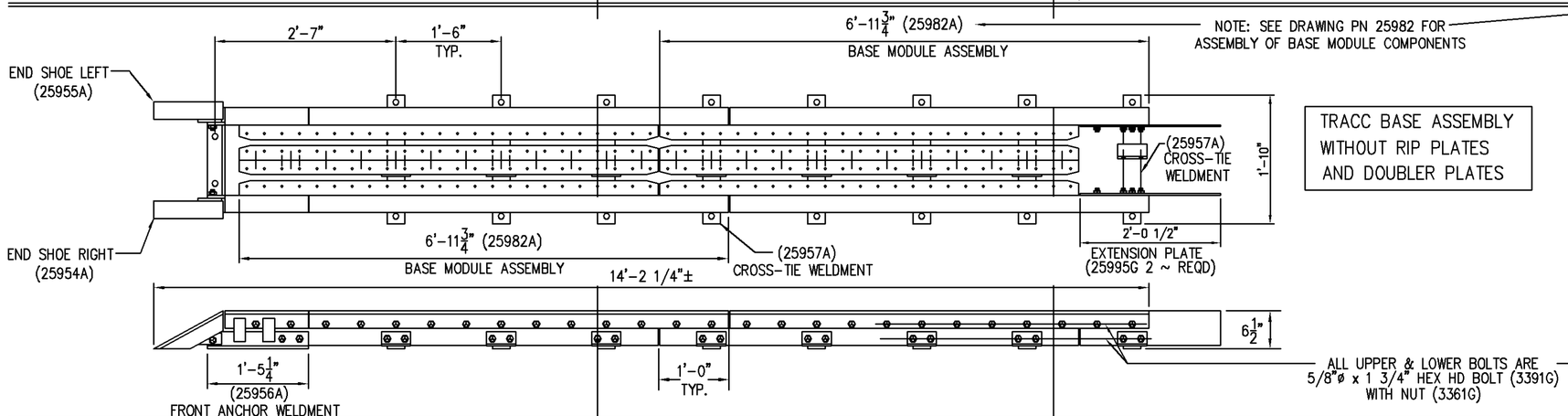

TRACC BASE ASSEMBLY
WITHOUT RIP PLATES
AND DOUBLER PLATES

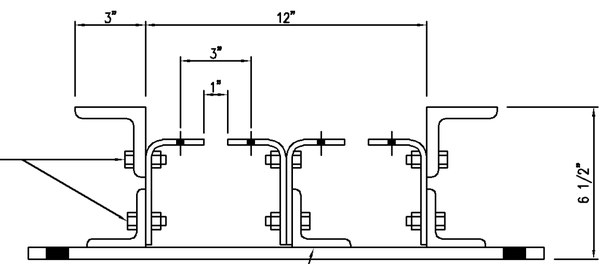

SECTION "A-A"

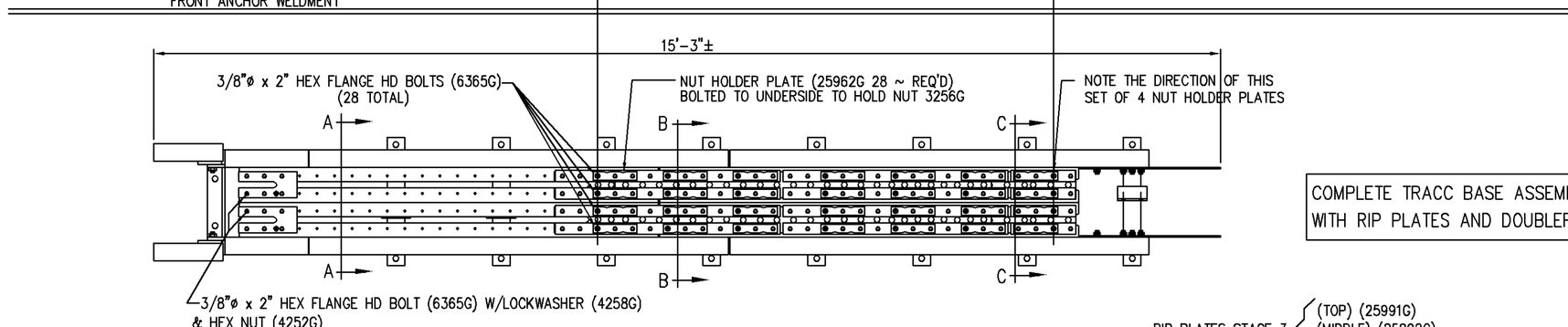

COMPLETE TRACC BASE ASSEMBLY
WITH RIP PLATES AND DOUBLERS

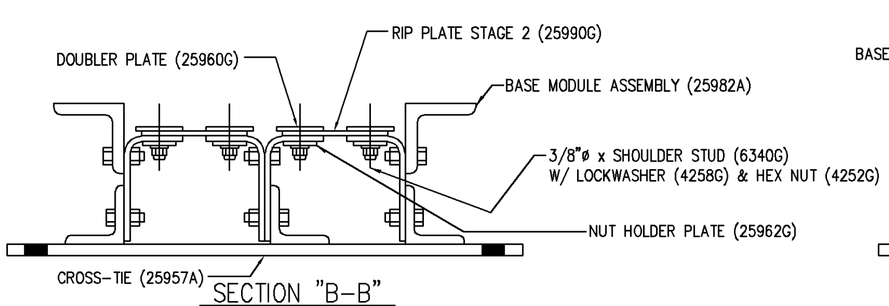

SECTION "B-B"

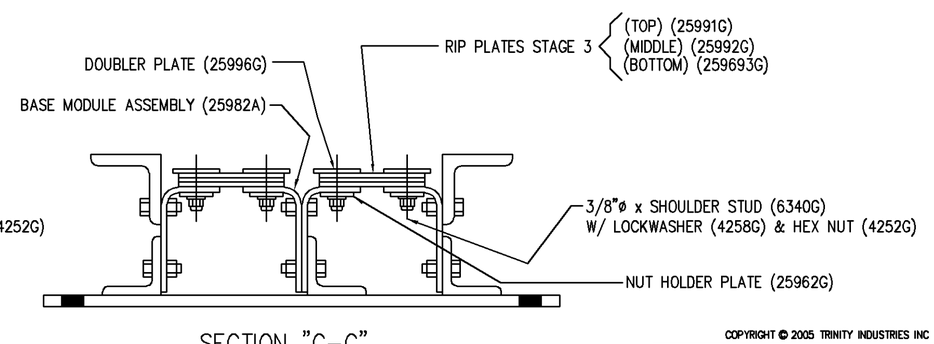

SECTION "C-C"

COPYRIGHT © 2005 TRINITY INDUSTRIES INC
This drawing and the information shown thereon is the sole property of TRINITY INDUSTRIES, INC. Neither the drawing nor such information is to be used for any purpose other than that for which it was specifically furnished by TRINITY INDUSTRIES, INC., nor is any reproduction authorized without written permission.

REV.	CHK'D	BY	DATE	REMARKS
1		SAR	6/17/05	UPDATED PART NUMBERS

TRACC

SHORTRACC
CRASH-CUSHION ATTENUATING TERMINAL
ASSEMBLED BASE UNIT
PN 25994

TRINITY INDUSTRIES, INC.
HIGHWAY SAFETY PRODUCTS
2525 STEMMONS FREEWAY, DALLAS, TX 75207

DRAWN	LH
CHECKED	B.T.
APPROVED	
DATE	05/16/05
ENG. FILE #	SS1004-01E
SHT.No.	E1 OF 1
DRAWING NO.	SS 1004/PN 25994
REV.	1

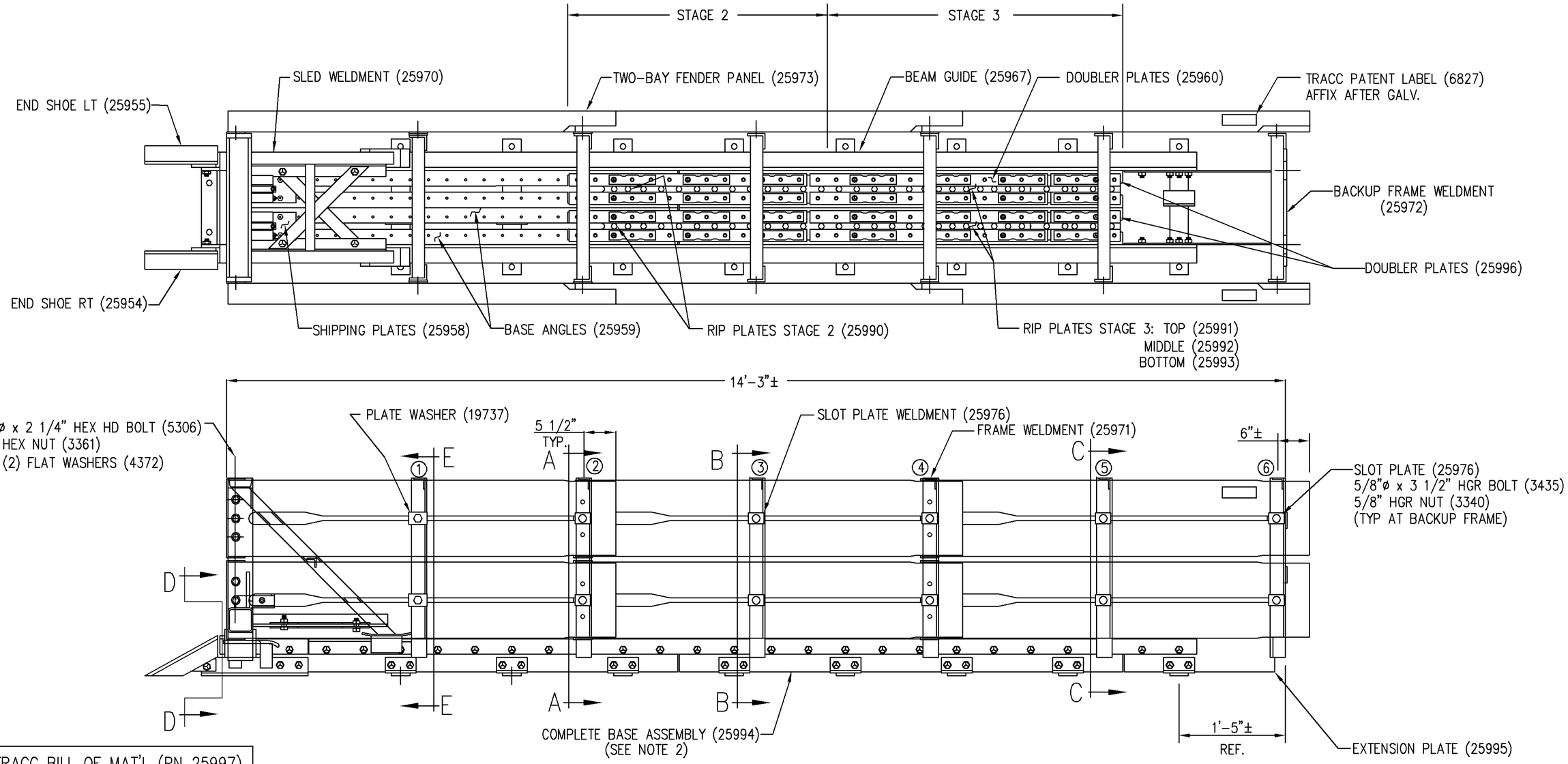

SHORTRACC BILL OF MAT'L (PN 25997)			
PART NUMBER	QTY	DESCRIPTION	WT/EA
19737G	12	1/4"x3"x2 1/4"TRACC WSHR	0.5#
25970A	1	SLED WELDMENT	185#
25971A	5	FRAME WELDMENT	60#
25972A	1	BACKUP FRAME WELDMENT	74#
25973A	12	TWO – BAY FENDER PANEL	49#
25975A	2	SHREDDER ASSEMBLY	6#
25976A	20	SLOT PLATE	0.4#
25994A	1	ASSEMBLED BASE(NOTE 2)	997#
TOTAL WEIGHT (EXCLUDES SHOP HRDWR)			2170#

SHOP HARDWARE (GALV A153)			
PART NUMBER	QTY	DESCRIPTION	MATL SPEC
3253G	2	HITCH PIN CLIP	
3340G	20	5/8" HGR NUT	A563 GR A
3361G	30	5/8" HEX NUT	A563 GR DH
3391G	16	5/8"ø x 1 3/4" HEX HD BOLT	A325
3400G	8	5/8"ø x 2" HGR BOLT	A307 GR A
3435G	12	5/8"ø x 3 1/2" HGR BOLT	A307 GR A
4372G	60	5/8" FLAT WASHER	F436
4425G	2	3/4" x 2" CLEVIS PIN	
5306G	14	5/8"ø x 2 1/4" HEX HD BOLT	A325
6827B	2	TRACC PATENT LABEL	

NOTES:
1.) FOR SECTIONAL VIEWS SEE SHEET E2 OF 2.
2.) SEE DRAWING SS1004 (PN 25994) FOR ASSEMBLY OF ALL BASE COMPONENTS.

REV.	CHK'D	BY	DATE	REMARKS
1		SAR	6/18/05	REVISED WEIGHT

TRACC

SHORTRACC
CRASH-CUSHION ATTENUATING TERMINAL
PLAN, ELEVATION, & SECTION
SHOP ASSEMBLY DETAILS
PN 25997

TRINITY INDUSTRIES, INC.
HIGHWAY SAFETY PRODUCTS
2525 STEMMONS FREEWAY, DALLAS, TX 75207

DRAWN	LH
CHECKED	BT
APPROVED	
DATE	05/24/05
ENG. FILE #	SS1005-01E
SHT.No.	E1 OF 2
DRAWING NO.	SS 1005/PN 25997
REV.	1

COPYRIGHT © 2005 TRINITY INDUSTRIES INC

This drawing and the information shown thereon is the sole property of TRINITY INDUSTRIES, INC. Neither the drawing nor such information is to be used for any purpose other than that for which it was specifically furnished by TRINITY INDUSTRIES, INC., nor is any reproduction authorized without written permission.

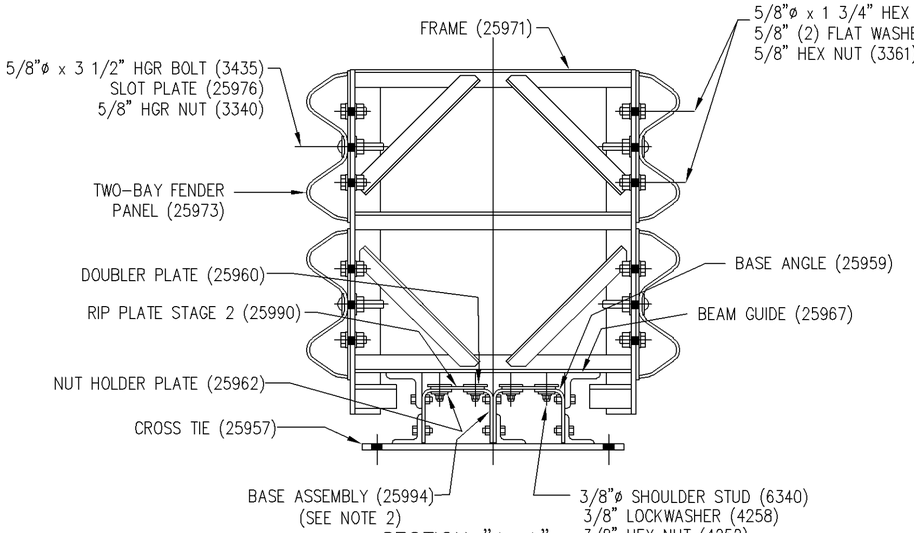

SECTION "A-A"

FRAME ② SHOWN
FRAME ④ SIMILAR

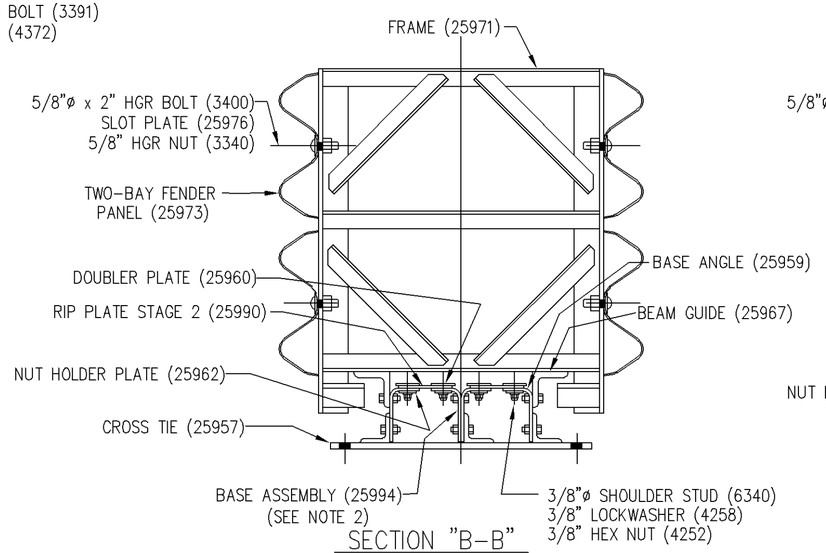

SECTION "B-B"

FRAME ③ SHOWN

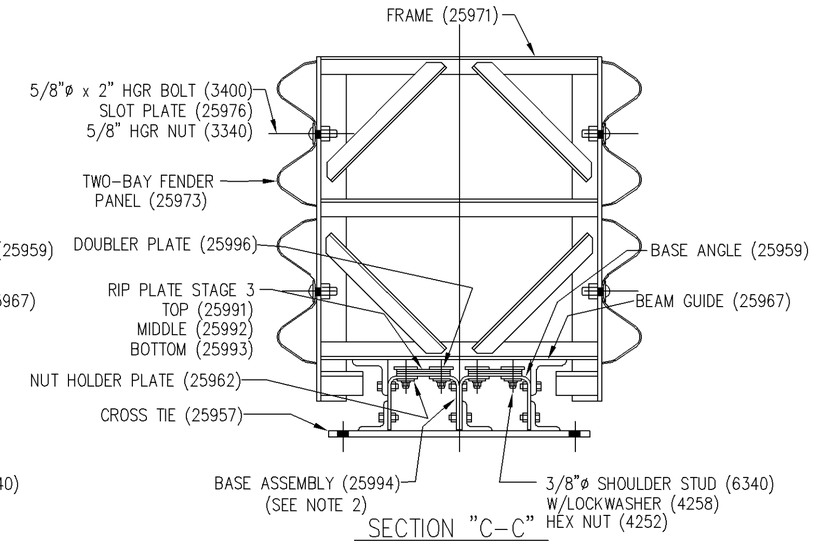

SECTION "C-C"

FRAME ⑤ SHOWN

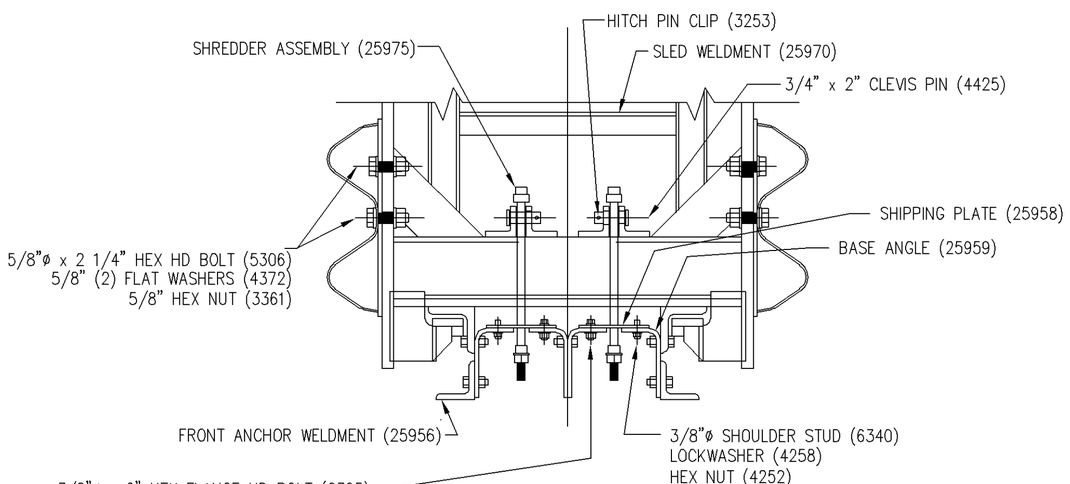

SECTION "D-D"

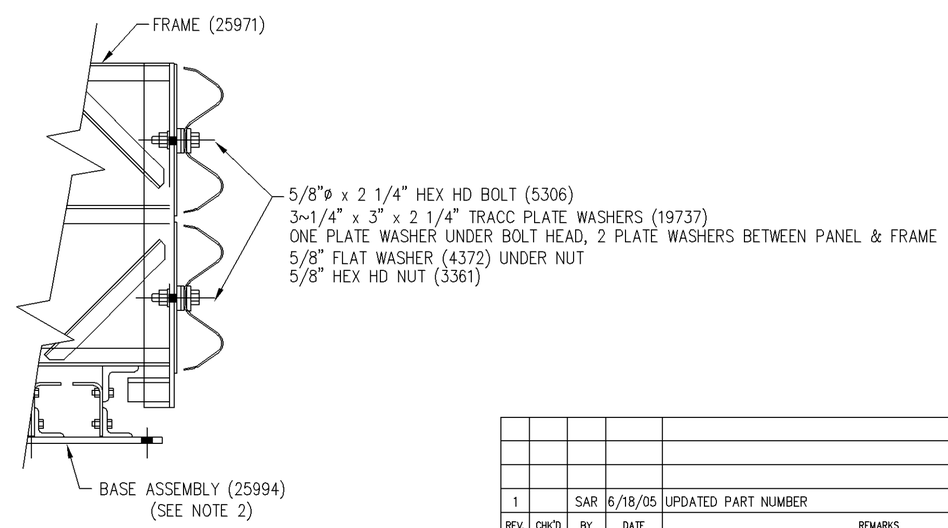

SECTION "E-E"

FRAME ① SHOWN

NOTES:

1.) FOR PLAN & ELEVATION VIEW SEE SHEET E1 OF 2.
2.) SEE DRAWING SS1004 (PN 25994) FOR ASSEMBLY OF ALL BASE COMPONENTS.

REV.	CHK'D	BY	DATE	REMARKS
1		SAR	6/18/05	UPDATED PART NUMBER

TRACC

SHORTRACC
CRASH-CUSHION ATTENUATING TERMINAL
PLAN, ELEVATION & SECTIONS
SHOP ASSEMBLY DETAILS
PN 25997

TRINITY INDUSTRIES, INC.
HIGHWAY SAFETY PRODUCTS
2525 STEMMONS FREEWAY, DALLAS, TX 75207

DRAWN	L. H.
CHECKED	B.T.
APPROVED	
DATE	05/24/05
ENG. FILE #	SS1005-02E
SHT.No.	E2 OF 2
DRAWING NO.	SS 1005/PN 25997
REV.	1

COPYRIGHT ©2005 TRINITY INDUSTRIES INC
This drawing and the information shown thereon is the sole property of TRINITY INDUSTRIES, INC. Neither the drawing nor such information is to be used for any purpose other than that for which it was specifically furnished by TRINITY INDUSTRIES, INC., nor is any reproduction authorized without written permission.

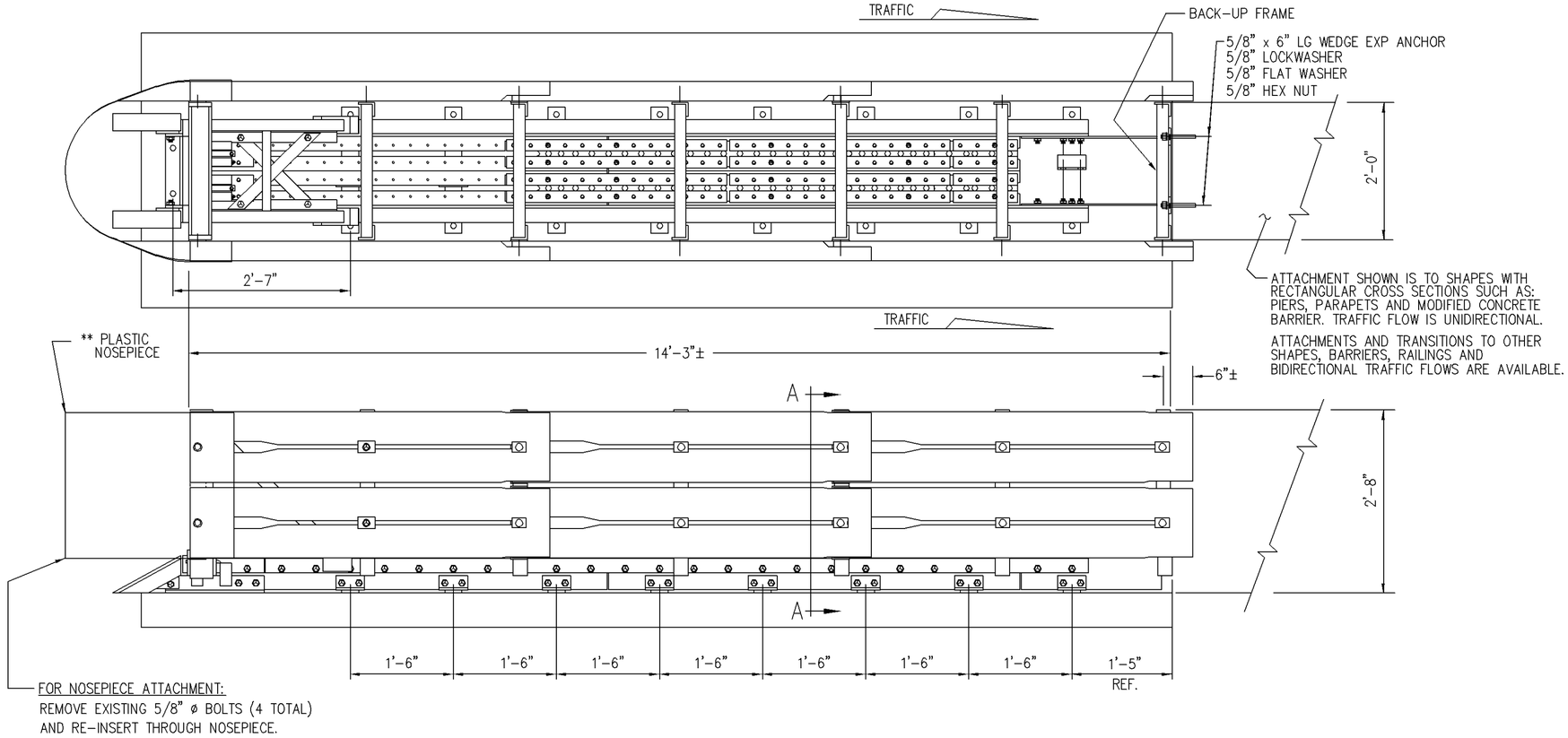

TRACC BILL OF MATERIAL		
PART NUMBER	QTY	DESCRIPTION
25997A	1	TRACC UNIT (FULLY ASSEMBLED)
3310G	4	5/8" LOCKWASHER
4451G	4	5/8" x 6" WEDGE EXP ANCHOR
6825B	4	REFLECTIVE TAPE
6532B	1	PLASTIC NOSEPIECE
** ANCHOR HARDWARE (FULL CONCRETE BASE)		
5204G	18	5/8" x 7 1/16" ANCHOR STUD
3310G	18	5/8" LOCKWASHER
3361G	18	5/8" HEX NUT
3300G	18	5/8" FLAT WASHER
☆ 5206B	2	ADHESIVE HIT HY 150(CARTRIDGE)
** ANCHOR HARDWARE (ASPHALT BASE)		
6380G	18	5/8" x 18" ALL THD ROD
3310G	18	5/8" LOCKWASHER
3361G	18	5/8" HEX NUT
3300G	18	5/8" FLAT WASHER
☆ 5206B	4	ADHESIVE HIT HY 150(CARTRIDGE)

EACH TRACC UNIT SHIPS 100 % ASSEMBLED (PLASTIC NOSE INSTALLED AFTER PLACEMENT)

** SEE PRODUCT MANUAL

☆ EACH CARTRIDGE INCLUDES 1 EACH: MIXER HY 150 CARTRIDGE (NOZZLE)
FILLER HIT HY 150 (FILLER TUBE)

OPTIONAL TRACC ANCHOR ITEMS	
PART NUMBER	DESCRIPTION
5205B	ADHESIVE DISPENSER
5207B	MIXER HIT HY150 (NOZZLE)
5208B	FILLER HIT HY150 (FILLER TUBE)
5209B	BIT TE-C+ 11/16-18 (11/16"ø BIT)

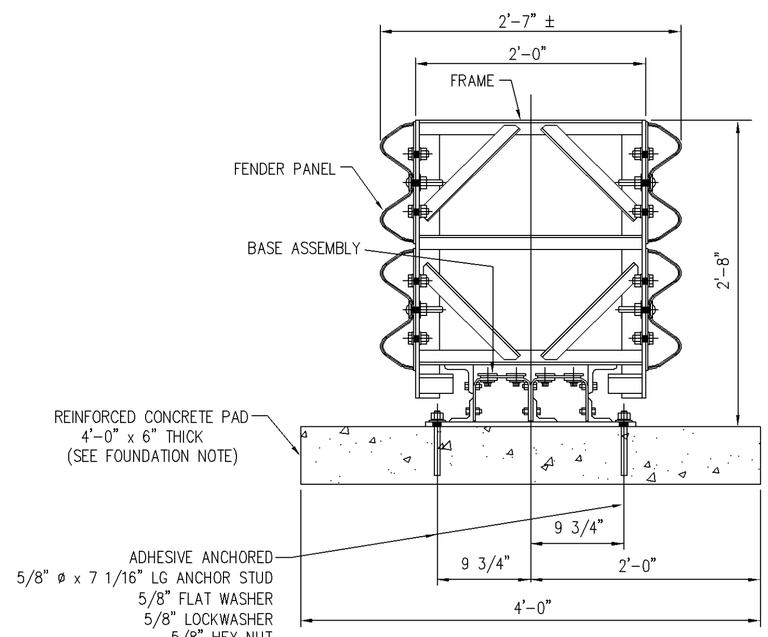

SECTION "A-A"

FOUNDATION NOTE:

6" REINFORCED CONCRETE PAD IS SHOWN
OTHER OPTIONS ARE :

a) 8" THICK MINIMUM UNREINFORCED CONCRETE
b) 8" MINIMUM THICK ASPHALT
c) 3" THICK (MIN) ASPHALT OVER 3" (MIN) CONCRETE
d) 6" THICK ASPHALT OVER 6" COMPACTED SUBBASE.

REV.	CHK'D	BY	DATE	REMARKS

TRACC

SHORTRACC
CRASH-CUSHION ATTENUATING TERMINAL
PLAN, ELEVATION & SECTIONS
(UNIDIRECTIONAL, DIRECT ATTACHMENT)

TRINITY INDUSTRIES, INC.
HIGHWAY SAFETY PRODUCTS
2525 STEMMONS FREEWAY, DALLAS, TX 75207

DRAWN	LH
CHECKED	B.T.
APPROVED	
DATE	05/24/05
ENG. FILE #	SS1006-01E
SHT.No.	E1 OF 1
DRAWING NO.	SS 1006
REV.	0

COPYRIGHT © 2005 TRINITY INDUSTRIES INC
This drawing and the information shown thereon is the sole property of TRINITY INDUSTRIES, INC. Neither the drawing nor such information is to be used for any purpose other than that for which it was specifically furnished by TRINITY INDUSTRIES, INC., nor is any reproduction authorized without written permission.

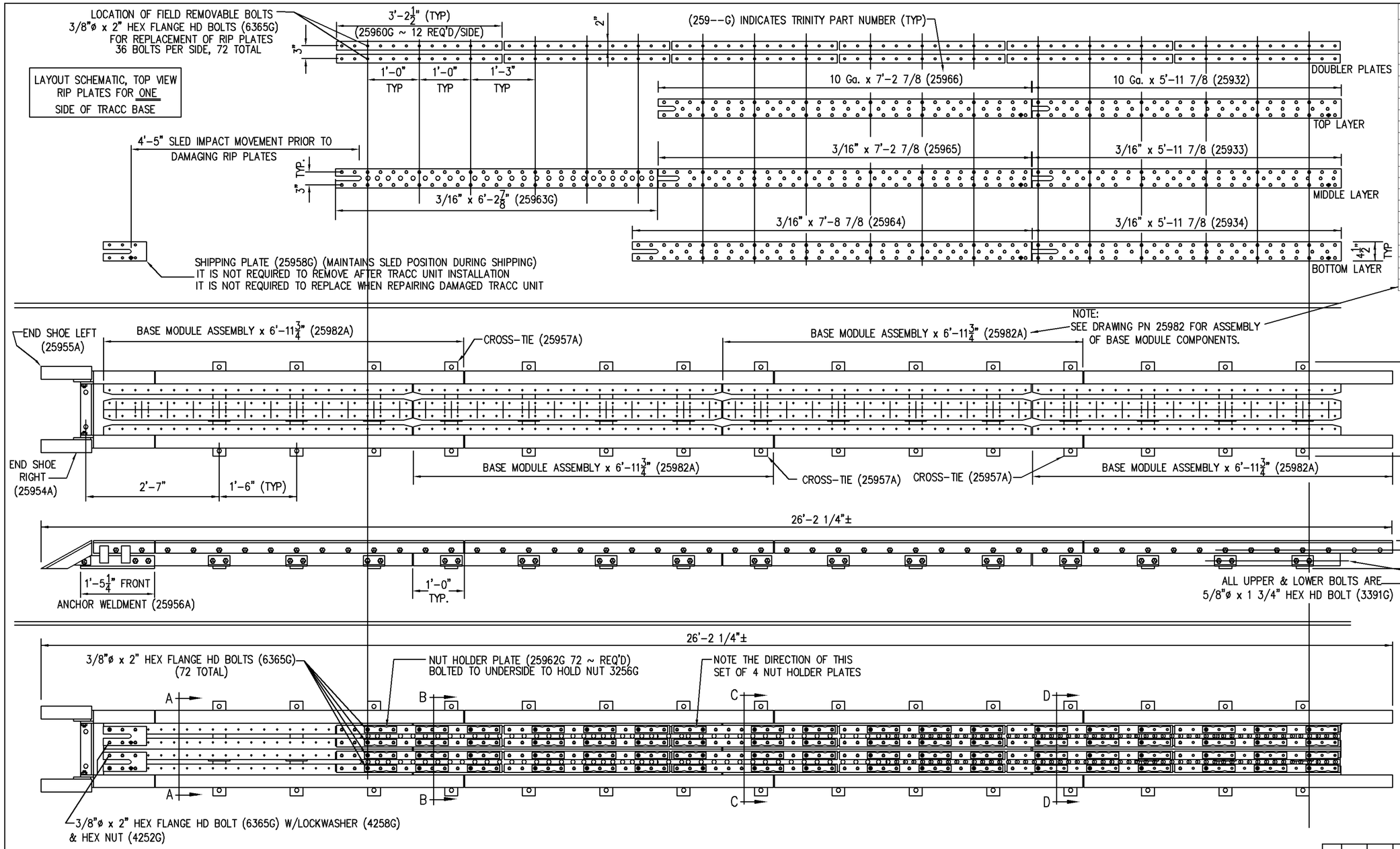

FASTRACC BASE (25935A) BILL OF MATERIALS

Part #	Description	Qty	WT. EACH (#)	TOTAL WT.
03256G	3/8" Shoulder Nut	72	0.030	2.16
03361G	5/8" Heavy Hex Nut (A563 DH)	42	0.120	5.04
03391G	5/8" x 1 3/4" Hex Head Bolt (A325)	42	0.210	8.82
04252G	3/8" Hex Nut	252	0.030	7.56
04258G	3/8" Lock Washer	252	0.006	1.512
06340G	3/8" X 1 1/2" Shoulder Stud	250	0.060	15
06365G	3/8" x 2" Hex Flange Hd Bolt (GR-5)	74	0.070	5.04
25932G	Rip Plate, Stage 4, Top	2	12	24
25933G	Rip Plate, Stage 4, Middle	2	17	34
25934G	Rip Plate, Stage 4, Bottom	2	17	34
25954A	End Shoe, Right	1	11	11
25955A	End Shoe, Left	1	11	11
25956A	Front Anchor Weldment	1	67	67
25957A	Cross Tie	3	18	54
25958G	Rip Plate, Stage 1(Shipping Plate)	2	0.8	1.6
25960G	Doublers	24	8	192
25962G	Nut Holder (Nut Retainer Plate)	72	0.5	36
25963G	Rip Plate, Stage 2	2	17	34
25964G	Rip Plate, Stage 3, Bottom	2	22	44
25965G	Rip Plate, Stage 3, Middle	2	20	40
25966G	Rip Plate, Stage 3, Top	2	15	30
25982A	Base Module Assembly	4	329	1316

APPROX. SHIP WT. 1974#

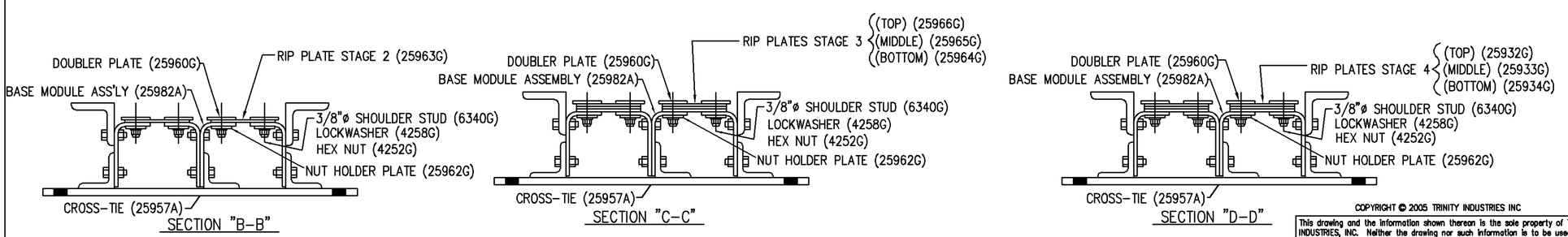

COPYRIGHT © 2005 TRINITY INDUSTRIES INC
This drawing and the information shown thereon is the sole property of TRINITY INDUSTRIES, INC. Neither the drawing nor such information is to be used for any purpose other than that for which it was specifically furnished by TRINITY INDUSTRIES, INC., nor is any reproduction authorized without written permission.

REV.	CHK'D	BY	DATE	REMARKS
1		SAR	6/17/05	UPDATED PART NUMBERS

TRACC

FASTRACC
CRASH-CUSHION ATTENUATING TERMINAL
ASSEMBLED BASE UNIT
PN 25935

TRINITY INDUSTRIES, INC.
HIGHWAY SAFETY PRODUCTS
2525 STEMMONS FREEWAY, DALLAS, TX 75207

DRAWN	LH
CHECKED	C.C.
APPROVED	
DATE	06/08/05
ENG. FILE #	SS1007-01E
SHT.No.	E1 OF 1
DRAWING NO.	SS 1007/PN 25935
REV.	1

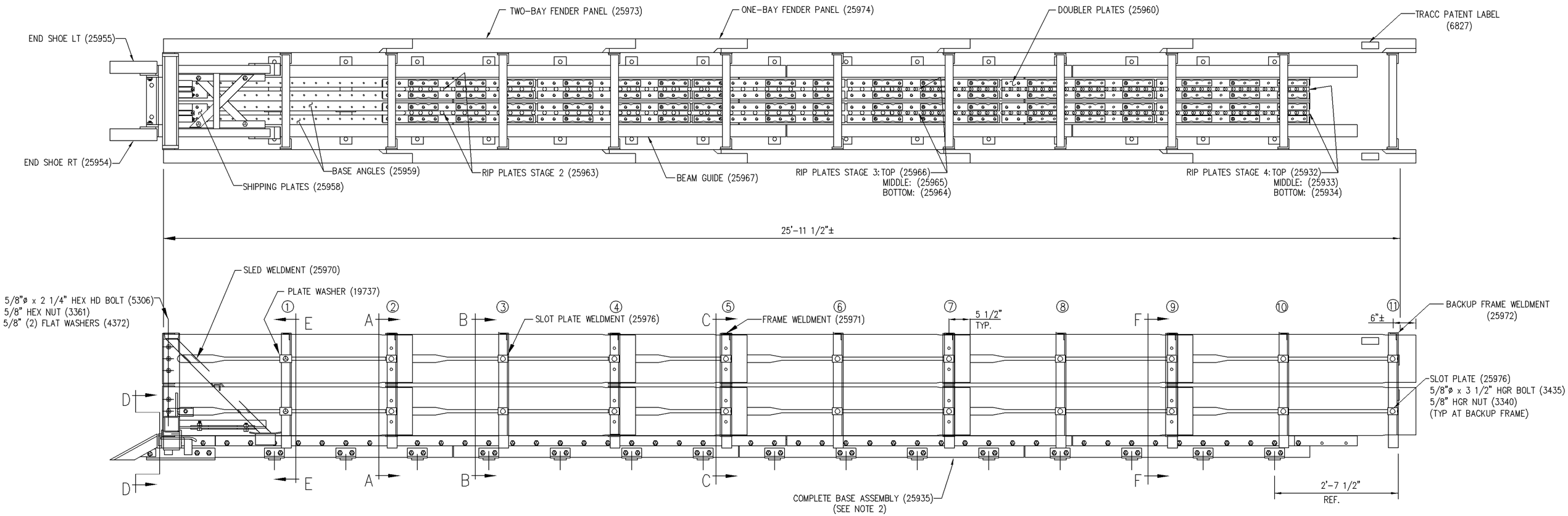

TRACC BILL OF MATERIAL (PN 25936)			
PART NUMBER	QTY	DESCRIPTION	WT/EA
19737G	12	1/4"x3"x2 1/4"TRACC WSHR	0.5#
25970A	1	SLED WELDMENT	185#
25971A	10	FRAME WELDMENT	60#
25972A	1	BACKUP FRAME WELDMENT	74#
25973A	20	TWO – BAY FENDER PANEL	49#
25974A	4	ONE – BAY FENDER PANEL	28#
25975A	2	SHREDDER ASSEMBLY	6#
25976A	40	SLOT PLATE	0.4#
25935A	1	ASSEMBLED BASE(NOTE 2)	1974#
TOTAL WEIGHT (EXCLUDES SHOP HRDWR)			3959#

SHOP HARDWARE (GALV A153)			
PART NUMBER	QTY	DESCRIPTION	MATL SPEC
3253G	2	HITCH PIN CLIP	
3340G	40	5/8" HGR NUT	A563 GR A
3361G	54	5/8" HEX NUT	A563 GR DH
3391G	40	5/8"ø x 1 3/4" HEX HD BOLT	A325
3400G	16	5/8"ø x 2" HGR BOLT	A307 GR A
3435G	24	5/8"ø x 3 1/2" HGR BOLT	A307 GR A
4372G	104	5/8" FLAT WASHER	F436
4425G	2	3/4" X 2" CLEVIS PIN	
5306G	14	5/8"ø x 2 1/4" HEX HD BOLT	A325
6827B	2	TRACC PATENT LABEL	

NOTES:
1.) FOR SECTIONAL VIEWS SEE SHEET E2 OF 2.
2.) SEE DRAWING SS1007 (PN 25935) FOR ASSEMBLY OF ALL BASE COMPONENTS.

REV.	CHK'D	BY	DATE	REMARKS

TRACC

FASTRACC
CRASH-CUSHION ATTENUATING TERMINAL
PLAN, ELEVATION, & SECTION
SHOP ASSEMBLY DETAILS
PN 25936

TRINITY INDUSTRIES, INC.
HIGHWAY SAFETY PRODUCTS
2525 STEMMONS FREEWAY, DALLAS, TX 75207

DRAWN	LH
CHECKED	CC
APPROVED	
DATE	06/09/05
ENG. FILE #	SS1008-01E
SHT.No.	E1 OF 2
DRAWING NO.	SS 1008/PN 25936
REV.	0

This drawing and the information shown thereon is the sole property of TRINITY INDUSTRIES, INC. Neither the drawing nor such information is to be used for any purpose other than that for which it was specifically furnished by TRINITY INDUSTRIES, INC., nor is any reproduction authorized without written permission.

COPYRIGHT © 2005 TRINITY INDUSTRIES INC

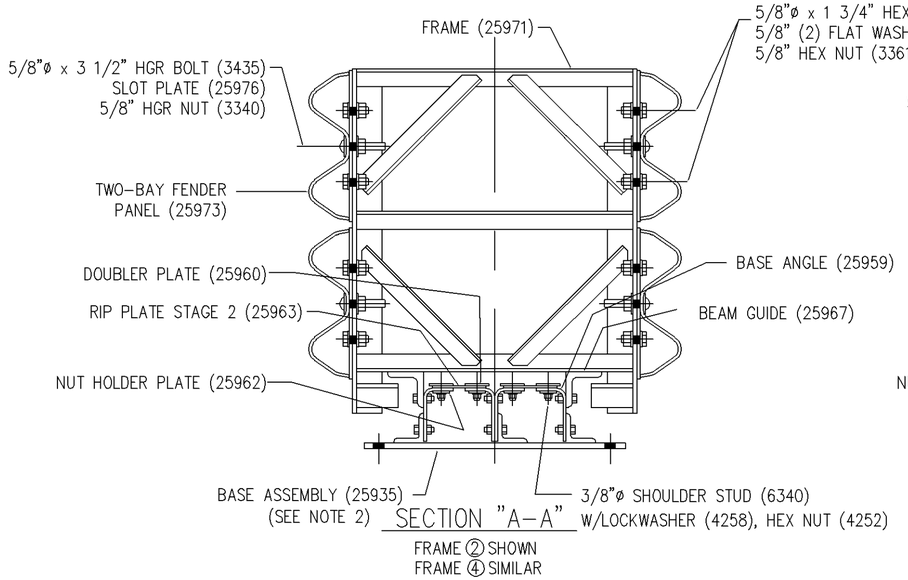

SECTION "A-A"

FRAME ② SHOWN
FRAME ④ SIMILAR

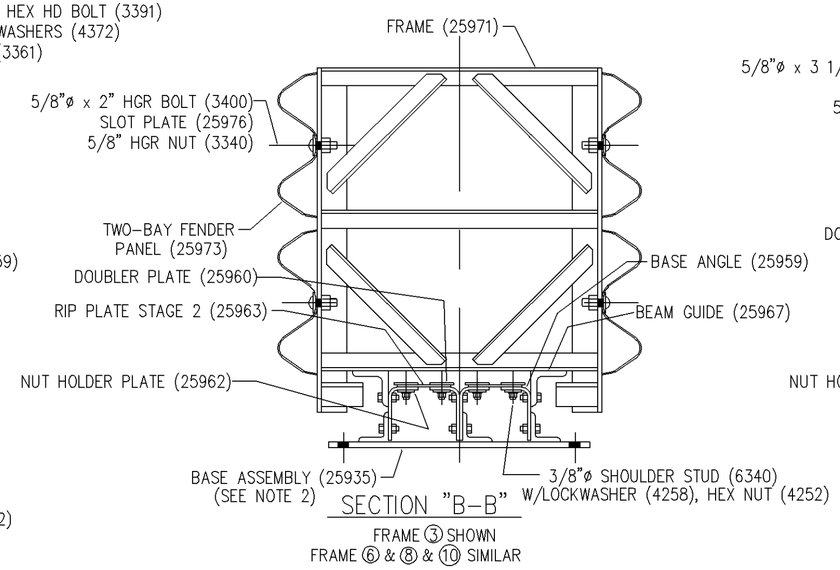

SECTION "B-B"

FRAME ③ SHOWN
FRAME ⑥ & ⑧ & ⑩ SIMILAR

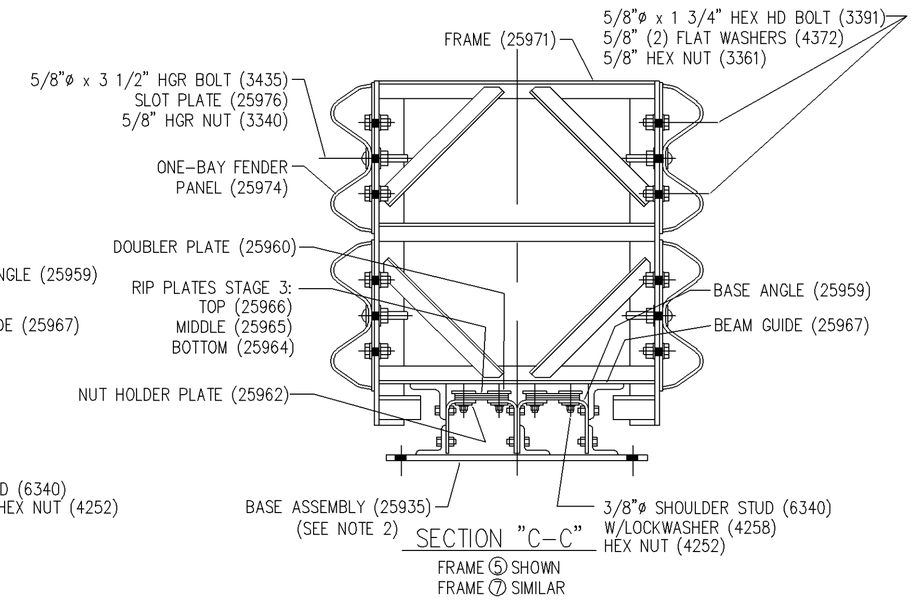

SECTION "C-C"

FRAME ⑤ SHOWN
FRAME ⑦ SIMILAR

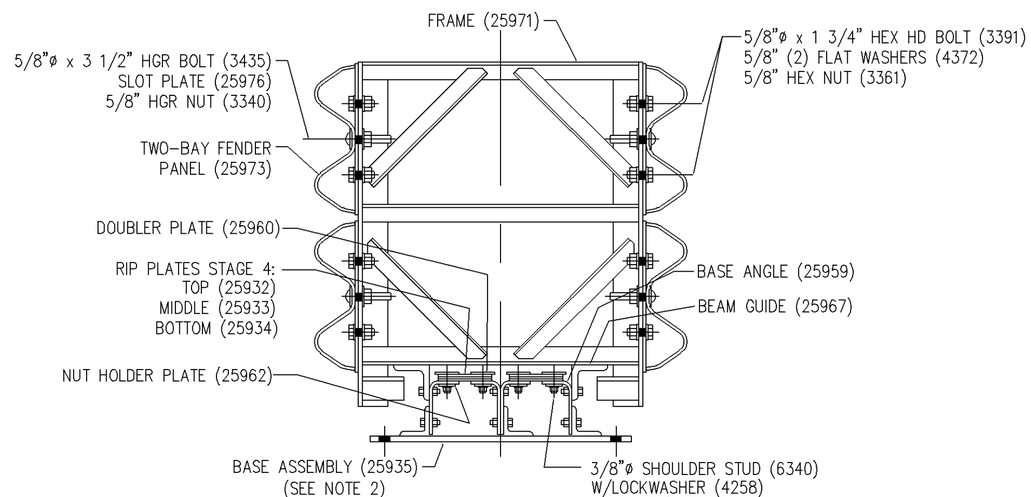

SECTION "F-F"

FRAME ⑨ SHOWN

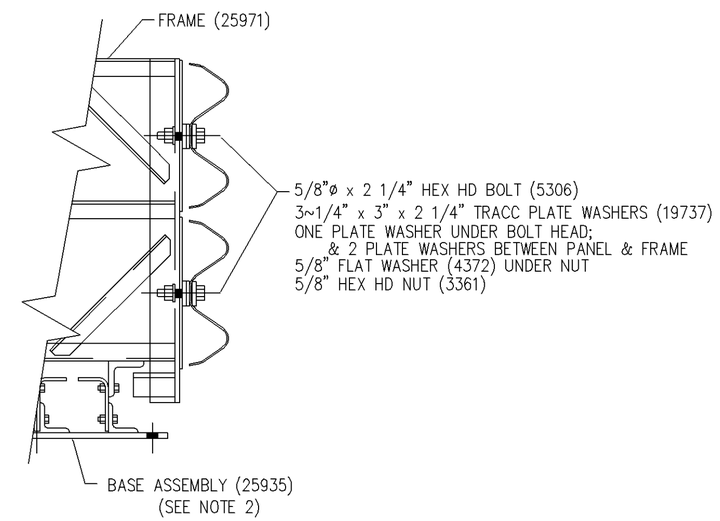

SECTION "E-E"

FRAME ① SHOWN

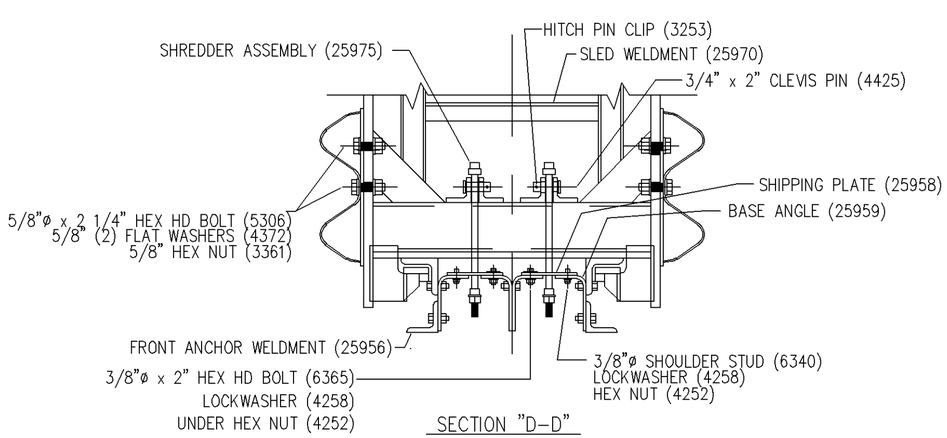

SECTION "D-D"

NOTES:

1.) FOR PLAN & ELEVATION VIEW SEE SHEET E1 OF 2.
2.) SEE DRAWING SS1007 (PN 25935) FOR ASSEMBLY OF ALL BASE COMPONENTS.

COPYRIGHT ©2005 TRINITY INDUSTRIES INC
This drawing and the information shown thereon is the sole property of TRINITY INDUSTRIES, INC. Neither the drawing nor such information is to be used for any purpose other than that for which it was specifically furnished by TRINITY INDUSTRIES, INC., nor is any reproduction authorized without written permission.

REV.	CHK'D	BY	DATE	REMARKS

TRACC

FASTRACC
CRASH-CUSHION ATTENUATING TERMINAL
PLAN, ELEVATION & SECTIONS
SHOP ASSEMBLY DETAILS
PN 25936

TRINITY INDUSTRIES, INC.
HIGHWAY SAFETY PRODUCTS
2525 STEMMONS FREEWAY, DALLAS, TX 75207

DRAWN	L. H.
CHECKED	C.C.
APPROVED	
DATE	06/08/05
ENG. FILE #	SS1008-02E
SHT.No.	E2 OF 2
DRAWING NO.	SS 1008/PN 25936
REV.	0

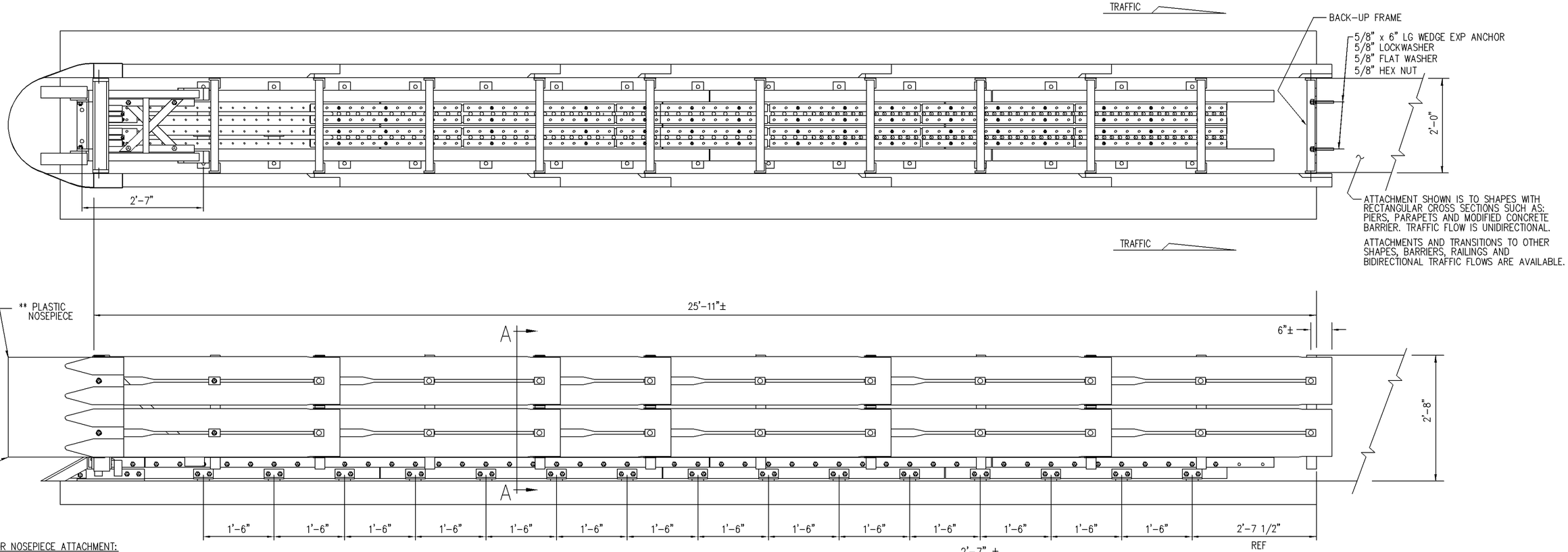

FASTRACC BILL OF MATERIAL

PART NUMBER	QTY	DESCRIPTION
25936A	1	FASTRACC UNIT (FULLY ASS'LD)
3310G	4	5/8" LOCKWASHER
4451G	4	5/8" x 6" WEDGE EXP ANCHOR
6825B	4	REFLECTIVE TAPE
6532B	1	PLASTIC NOSEPIECE
** ANCHOR HARDWARE (FULL CONCRETE BASE)		
5204G	32	5/8" x 7 1/16" ANCHOR STUD
3310G	32	5/8" LOCKWASHER
3361G	32	5/8" HEX NUT
3300G	32	5/8" FLAT WASHER
☆ 5206B	3	ADHESIVE HIT HY 150(CARTRIDGE)
** ANCHOR HARDWARE (ASPHALT BASE)		
6380G	32	5/8" x 18" ALL THD ROD
3310G	32	5/8" LOCKWASHER
3361G	32	5/8" HEX NUT
3300G	32	5/8" FLAT WASHER
☆ 5206B	7	ADHESIVE HIT HY 150(CARTRIDGE)

EACH TRACC UNIT SHIPS 100 % ASSEMBLED (PLASTIC NOSE INSTALLED AFTER PLACEMENT)

** SEE PRODUCT MANUAL

☆ EACH CARTRIDGE INCLUDES 1 EACH: MIXER HY 150 CARTRIDGE (NOZZLE)
FILLER HIT HY 150 (FILLER TUBE)

OPTIONAL TRACC ANCHOR ITEMS

PART NUMBER	DESCRIPTION
5205B	ADHESIVE DISPENSER
5207B	MIXER HIT HY150 (NOZZLE)
5208B	FILLER HIT HY150 (FILLER TUBE)
5209B	BIT TE-C+ 11/16-18 (11/16"ø BIT)

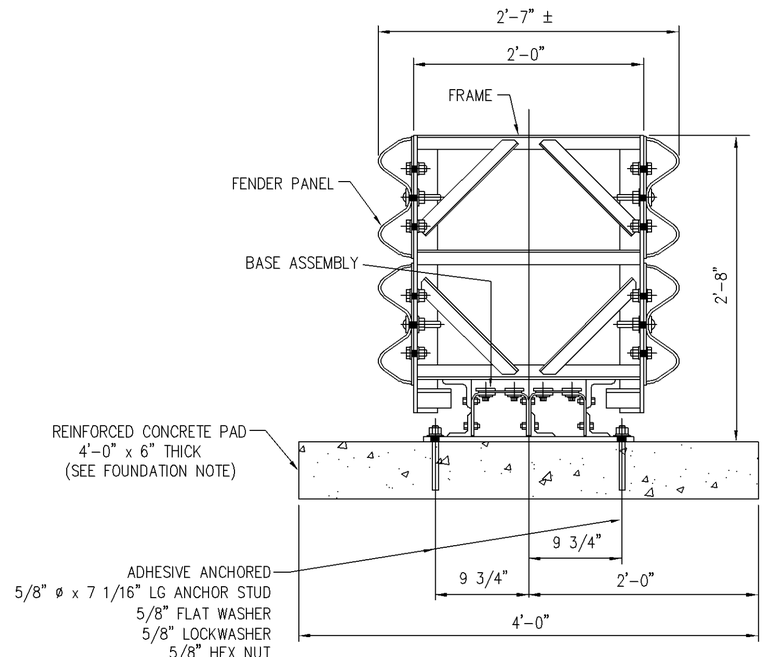

SECTION "A-A"

FOUNDATION NOTE:

6" REINFORCED CONCRETE PAD IS SHOWN
OTHER OPTIONS ARE :

a) 8" THICK MINIMUM UNREINFORCED CONCRETE
b) 8" MINIMUM THICK ASPHALT
c) 3" THICK (MIN) ASPHALT OVER 3" (MIN) CONCRETE
d) 6" THICK ASPHALT OVER 6" COMPACTED SUBBASE.

REV.	CHK'D	BY	DATE	REMARKS

TRACC

FASTRACC
CRASH-CUSHION ATTENUATING TERMINAL
PLAN, ELEVATION & SECTIONS
(UNIDIRECTIONAL, DIRECT ATTACHMENT)

TRINITY INDUSTRIES, INC.
HIGHWAY SAFETY PRODUCTS
2525 STEMMONS FREEWAY, DALLAS, TX 75207

DRAWN	LH
CHECKED	C.C.
APPROVED	
DATE	06/10/05
ENG. FILE #	SS1009-01E
SHT.No.	E1 OF 1
DRAWING NO.	SS 1009
REV.	0

COPYRIGHT © 2005 TRINITY INDUSTRIES INC
This drawing and the information shown thereon is the sole property of TRINITY INDUSTRIES, INC. Neither the drawing nor such information is to be used for any purpose other than that for which it was specifically furnished by TRINITY INDUSTRIES, INC., nor is any reproduction authorized without written permission.

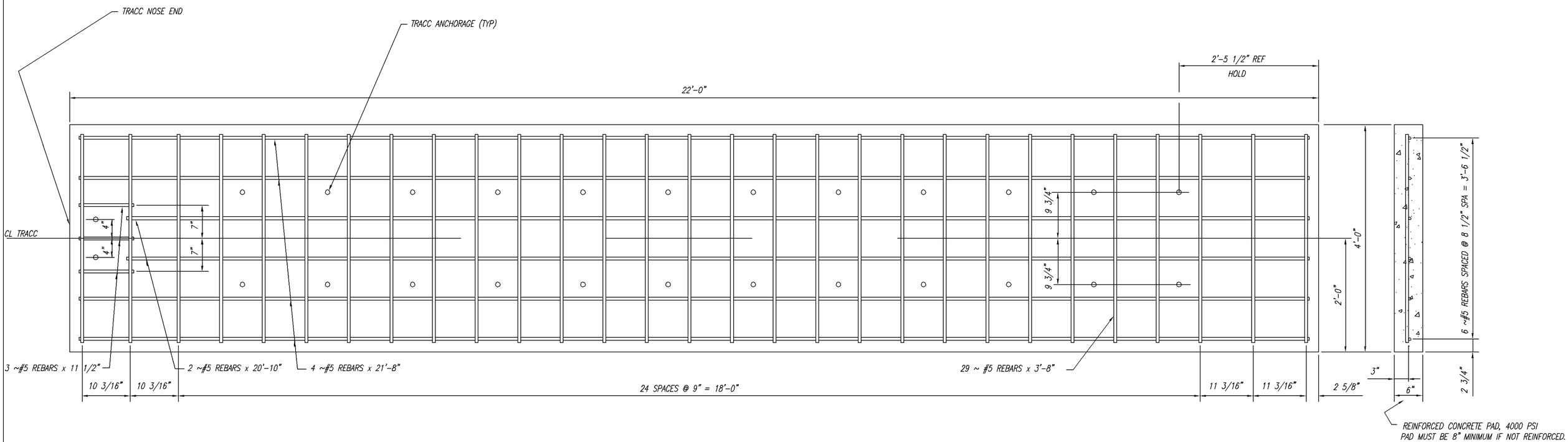

REV.	CHK'D	BY	DATE	REMARKS

TRACC

TRACC
CRASH-CUSHION ATTENUATING TERMINAL
22' CONCRETE FOUNDATION PLAN

DRAWN	BT
CHECKED	SG
APPROVED	
DATE	04/04/05
ENG. FILE #	SS1010-01E
SHT.No.	E1 OF 1
DRAWING NO.	SS 1010
REV.	0

TRINITY INDUSTRIES, INC.
HIGHWAY SAFETY PRODUCTS
2525 STEMMONS FREEWAY, DALLAS, TX 75356

COPYRIGHT © 2005 TRINITY INDUSTRIES INC

This drawing and the information shown therean is the sole property of TRINITY INDUSTRIES, INC. Neither the drawing nor such information is to be used for any purpose other than that for which it was specifically furnished by TRINITY INDUSTRIES, INC., nor is any reproduction authorized without written permission.

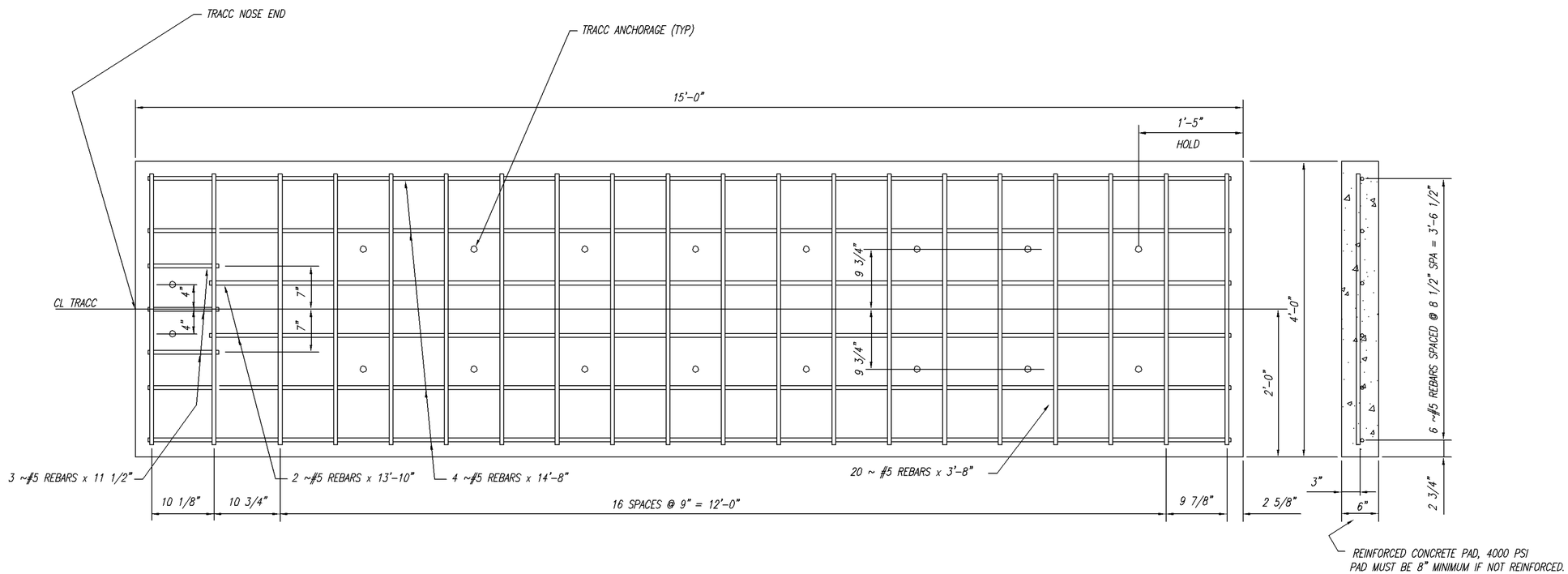

REV.	CHK'D	BY	DATE	REMARKS

TRACC

SHORTRACC
CRASH-CUSHION ATTENUATING TERMINAL
15' CONCRETE FOUNDATION PLAN

TRINITY INDUSTRIES, INC.
HIGHWAY SAFETY PRODUCTS
2525 STEMMONS FREEWAY, DALLAS, TX 75356

DRAWN	BT
CHECKED	SG
APPROVED	
DATE	04/04/05
ENG. FILE #	SS1013-01E
SHT.No.	E1 OF 1
DRAWING NO.	SS 1013
REV.	0

COPYRIGHT © 2005 TRINITY INDUSTRIES INC

This drawing and the information shown therean is the sole property of TRINITY INDUSTRIES, INC. Neither the drawing nor such information is to be used for any purpose other than that for which it was specifically furnished by TRINITY INDUSTRIES, INC., nor is any reproduction authorized without written permission.

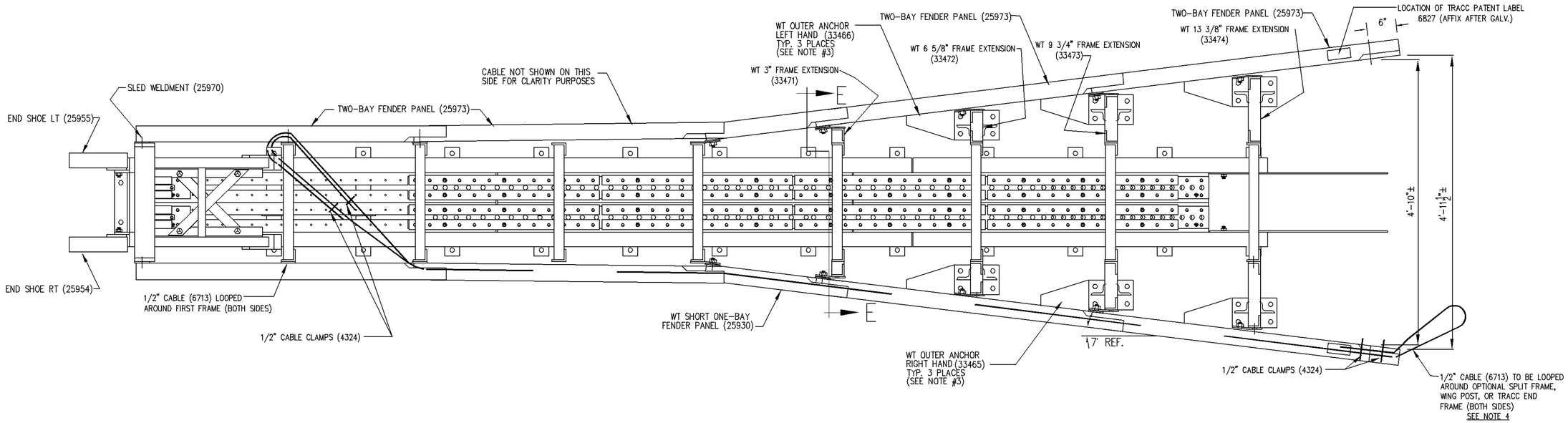

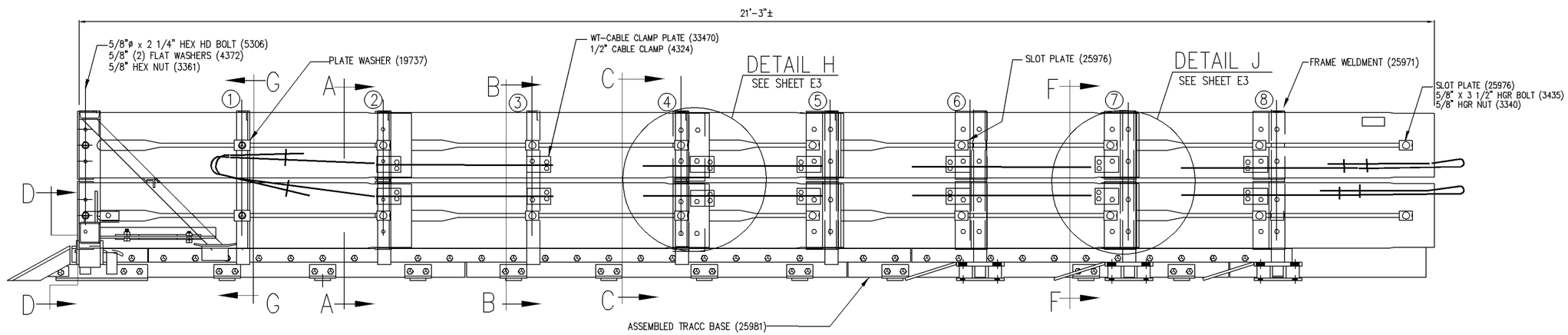

* SEE NOTE 3

WIDETRACC(PC25939) BILL OF MAT'L

	PRODUCT CODE	QTY	DESCRIPTION	WT/EA
	19737G	12	TRACC WSHR 1/4x3x2 1/4	.5#
	25930A	4	WTRACC-SHORT 1 BAY PANEL	24#
	25981A	1	TRACC BASE SS1001	1498#
	25970A	1	SLED WELDMENT	185#
	25971A	8	FRAME WELDMENT	60#
	25973A	16	TWO - BAY FENDER PANEL	49#
	25975A	2	SHREDDER ASSEMBLY	6.#
	25976A	32	SLOT PLATE	0.4#
*	33465A	3	WT-OUTER ANCH RIGHT	31#
*	33466A	3	WT-OUTER ANCH LEFT	31#
	33467G	20	WT-JOINT PLATE	6#
	33470G	28	WT-CABLE CLAMP PLATE	1#
	33471A	2	WT 3" EXTENDER FRAME	16#
	33472A	2	WT 6 5/8" EXT. FRAME	38#
	33473A	2	WT 9 3/4" EXT. FRAME	42#
	33474A	2	WT 13 3/8" EXT. FRAME	46#
			TOTAL WEIGHT (EXCLUDES HARDWARE)	3693#

SHOP HARDWARE (GALV A153)

PRODUCT CODE	QTY	DESCRIPTION	MATL SPEC
3253G	2	HITCH PIN CLIP	
3340G	32	5/8" HGR NUT	A563 GR A
3361G	134	5/8" HEX NUT	A563 GR DH
3391G	112	5/8"ø x 1 3/4" HEX HD BOLT	A325
3400G	8	5/8"ø x 2" HGR BOLT	A307 GR A
3435G	24	5/8"ø x 3 1/2" HGR BOLT	A307 GR A
4324G	40	1/2" CROSBY CABLE CLAMP	FORGED
4372G	264	5/8" FLAT WASHER	F436
4425G	2	3/4" x 2" CLEVIS PIN	
4438G	8	5/8"ø x 5" HEX HD BOLT	A325
5306G	14	5/8"ø x 2 1/4" HEX HD BOLT	A325
6713G	4	1/2"x 6 x 25 x25' IWRC CABLE	
6827B	2	TRACC PATENT LABEL	

NOTES:
1. SECTIONS AND DETAIL INFORMATION ARE ON SHEET E2 & E3.
2. SEE DRAWING SS1001 (PC 25981) FOR ASSEMBLY OF ALL BASE UNIT COMPONENTS.
3. P.C 33465 & P.C. 33466 ARE NOT ATTACHED TO WIDETRACC UNIT AND WILL BE SHIPPED LOOSE.
4. OPTIONAL SPLIT FRAME ATTACHMENT, WING POST AND/OR TRACC END FRAME, AND NECESSARY HARDWARE MUST BE ADDED TO BASE UNIT TO ACCOMODATE FIELD CONDITIONS AND TO COMPLETE ASSEMBLY.

COPYRIGHT ©2005 TRINITY INDUSTRIES INC

This drawing and the information shown thereon is the sole property of TRINITY INDUSTRIES, INC. Neither the drawing nor such information is to be used for any purpose other than that for which it was specifically furnished by TRINITY INDUSTRIES, INC., nor is any reproduction authorized without written permission.

REV.	CHK'D	BY	DATE	REMARKS

TRACC

58" WIDE TRACC DOUBLE FLARE
2005 WIDETRACC P.N. 25939
CRASH-CUSHION ATTENUATING TERMINAL
PLAN, ELEVATION & SECTIONS
SHOP ASSEMBLY DETAILS

TRINITY HIGHWAY SAFETY PRODUCTS
2525 STEMMONS FREEWAY
DALLAS, TX 75207

DRAWN	L. H.
CHECKED	C.C.
APPROVED	
DATE	08-08-05
ENG. FILE #	SS1018-01E
SHT.No.	E1 OF 3
DRAWING NO.	SS1018/25939
REV.	0

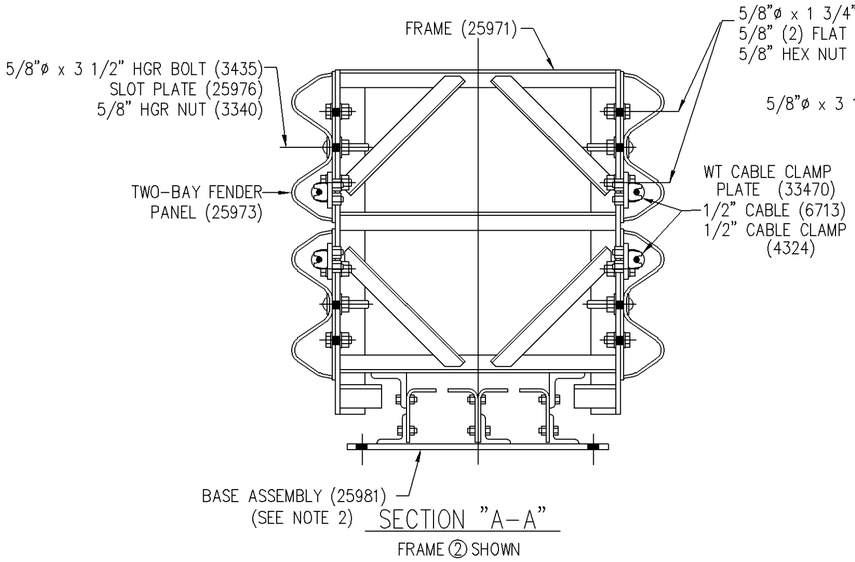

SECTION "A-A"

FRAME ② SHOWN

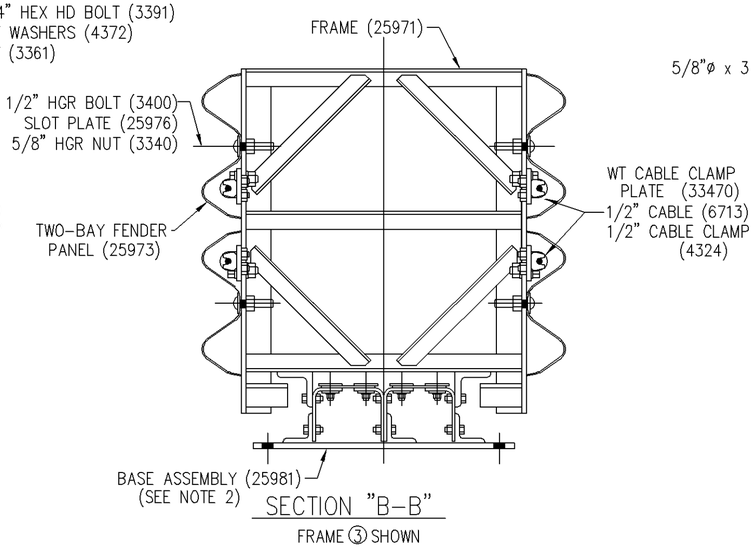

SECTION "B-B"

FRAME ③ SHOWN

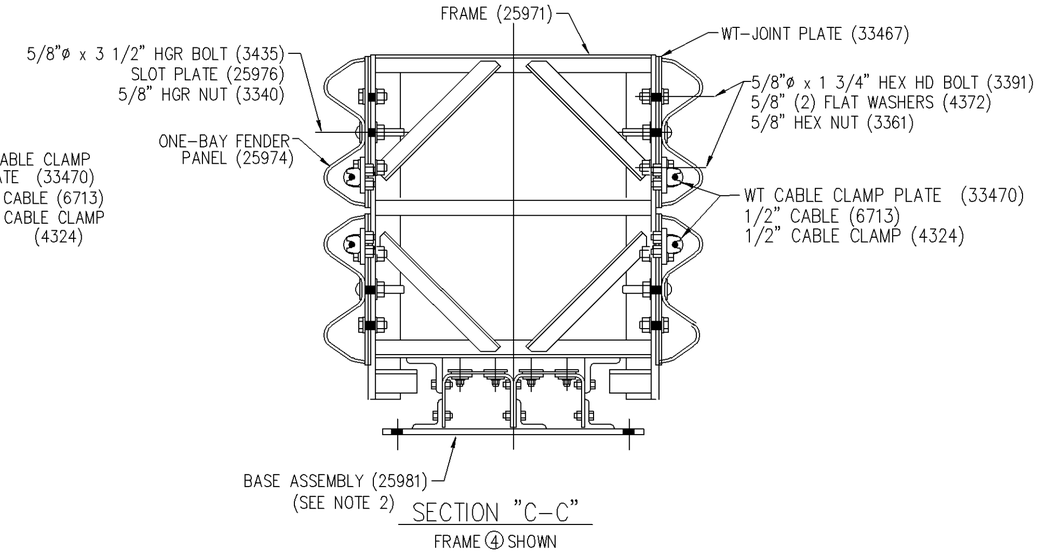

SECTION "C-C"

FRAME ④ SHOWN

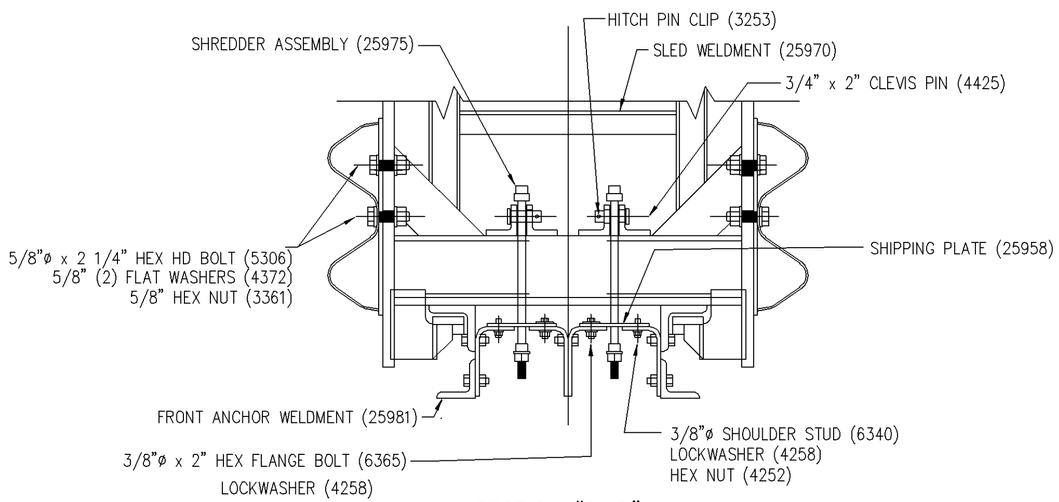

SECTION "D-D"

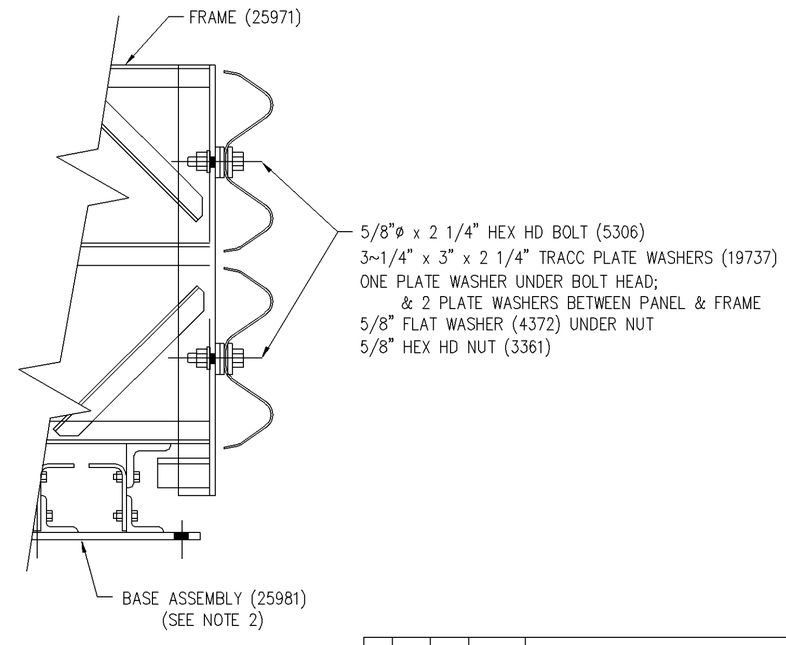

SECTION "G-G"

FRAME ① SHOWN

NOTES:

1.) FOR PLAN & ELEVATION VIEW SEE SHEET E1 OF 3.
2.) SEE DRAWING SS1001 (PN 25981) FOR ASSEMBLY OF ALL BASE COMPONENTS.

COPYRIGHT ©2005 TRINITY INDUSTRIES INC

This drawing and the information shown thereon is the sole property of TRINITY INDUSTRIES, INC. Neither the drawing nor such information is to be used for any purpose other than that for which it was specifically furnished by TRINITY INDUSTRIES, INC., nor is any reproduction authorized without written permission.

REV.	CHK'D	BY	DATE	REMARKS

TRACC

58" WIDETRACC DOUBLE FLARE
2005 WIDETRACC P.N. 25939
CRASH-CUSHION ATTENUATING TERMINAL
PLAN, ELEVATION & SECTIONS
SHOP ASSEMBLY DETAILS

TRINITY HIGHWAY SAFETY PRODUCTS
2525 STEMMONS FREEWAY
DALLAS, TX 75207

DRAWN	L. H.
CHECKED	C.C.
APPROVED	
DATE	08/08/05
ENG. FILE #	SS1018-02E
SHT.No.	E2 OF 3
DRAWING NO.	SS 1018/PN 25939
REV.	0

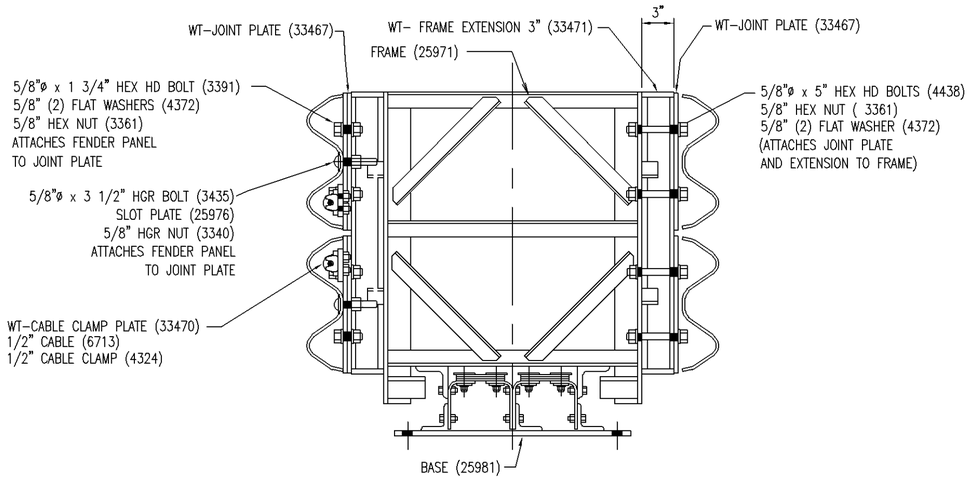

SECTION "E-E"

FRAME LOCATION (5)

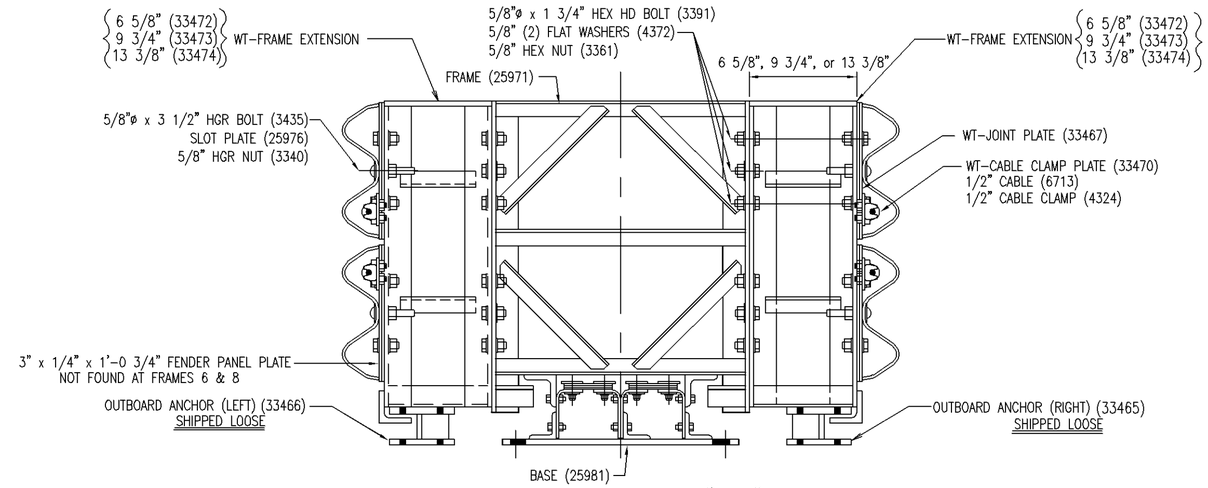

SECTION "F-F"

FRAME LOCATION (7) SHOWN

LOCATION (6) & (8) SIMILAR

EXCEPT NO FENDER PANEL PLATE ATTACHMENT

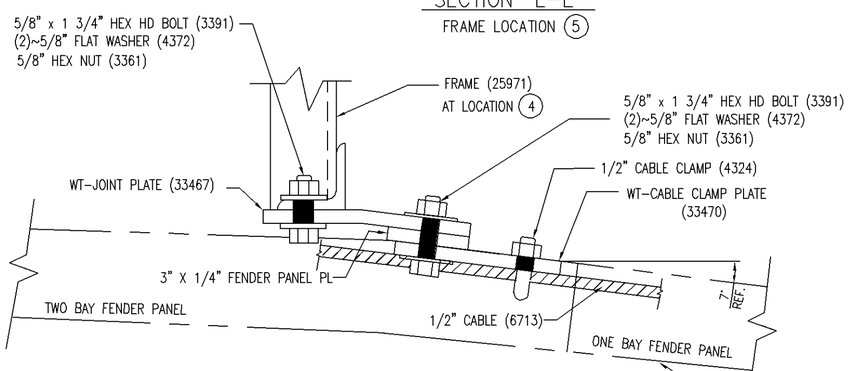

SECTION "AA-AA"

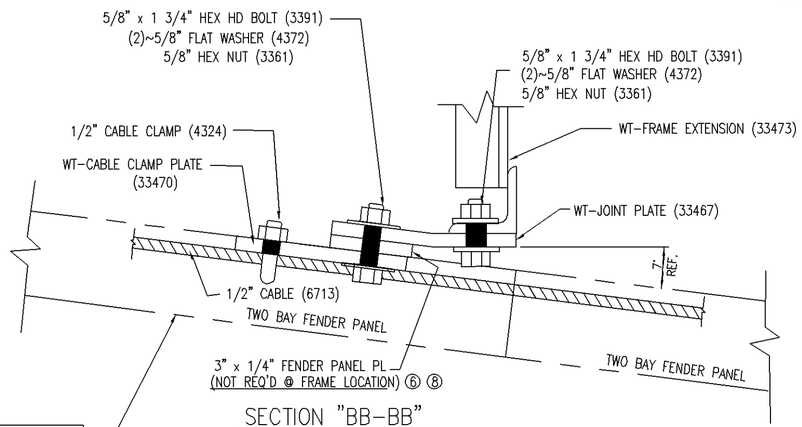

SECTION "BB-BB"

FENDER PANELS ARE SHOWN IN PHANTOM TO ALLOW FOR CLARITY OF OTHER COMPONENTS.

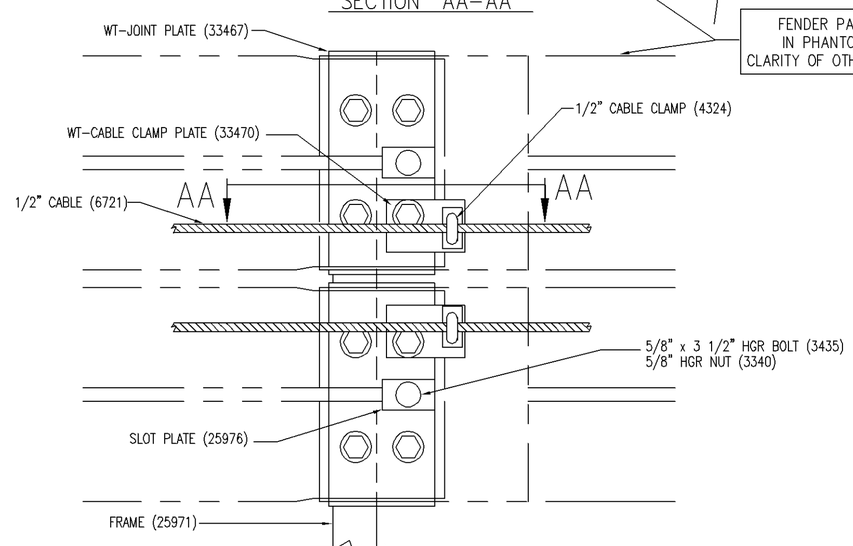

DETAIL "H"

FRAME LOCATION (4)

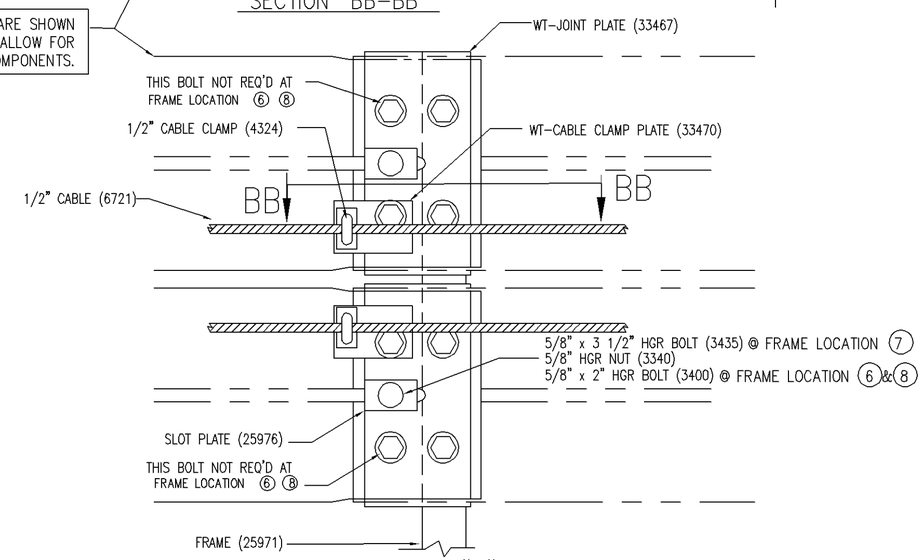

DETAIL "J"

FRAME LOCATION (7) SHOWN

LOCATION (6) & (8) SIMILAR

NOTES:

1. FOR PLAN & ELEVATION VIEW SEE SHEET E1 OF 3.
2. SEE DRAWING SS1007 (PC 25981) FOR ASSEMBLY OF ALL BASE UNIT COMPONENTS.

COPYRIGHT ©2005 TRINITY INDUSTRIES INC

This drawing and the information shown thereon is the sole property of TRINITY INDUSTRIES, INC. Neither the drawing nor such information is to be used for any purpose other than that for which it was specifically furnished by TRINITY INDUSTRIES, INC., nor is any reproduction authorized without written permission.

REV.	CHK'D	BY	DATE	REMARKS

TRACC

58" WIDETRACC DOUBLE FLARE
2005 WIDETRACC P.N. 25939
CRASH-CUSHION ATTENUATING TERMINAL
PLAN, ELEVATION & SECTIONS
SHOP ASSEMBLY DETAILS

TRINITY HIGHWAY SAFETY PRODUCTS
2525 STEMMONS FREEWAY
DALLAS, TX 75207

DRAWN	L. H.
CHECKED	C.C.
APPROVED	
DATE	08-08-05
ENG. FILE #	SS1018-03E
SHT.No.	E3 OF 3
DRAWING NO.	SS 1018/PC 25939
REV.	0

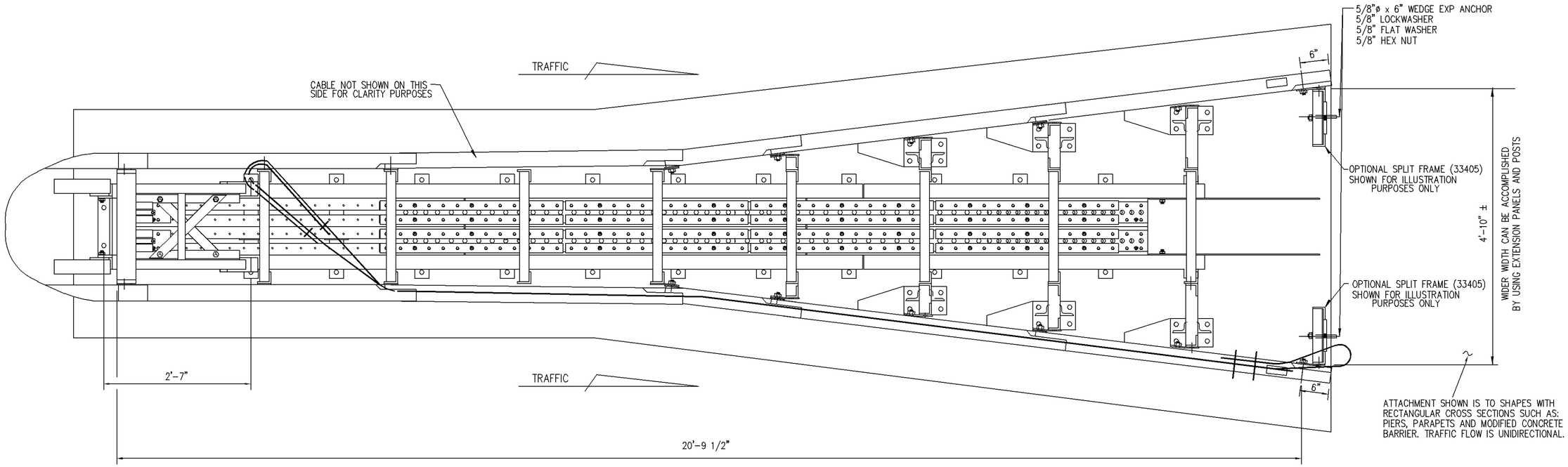

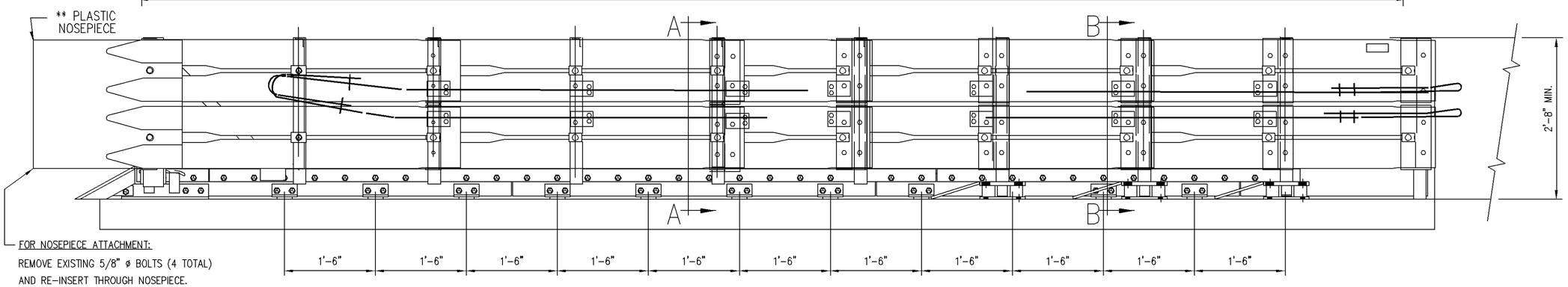

EACH TRACC UNIT SHIPS 100 % ASSEMBLED (PLASTIC NOSE INSTALLED AFTER PLACEMENT)

☆ EACH CARTRIDGE INCLUDES 1 EACH : MIXER HY 150 CARTDIDGE(NOZZLE)
: FILLER HIT HY 150 (FILLER TUBE)

WIDE TRACC BILL OF MATERIAL		
PRODUCT CODE	QTY	DESCRIPTION
25939A	1	58" WIDETRACC UNIT ASS'LY
6825B	4	REFLECTIVE TAPE
6532B	1	PLASTIC NOSEPEICE

OPTIONAL TRACC ANCHOR ITEMS	
PRODUCT CODE	DESCRIPTION
5205B	ADHESIVE DISPENSER
5207B	MIXER HIT HY150 (NOZZLE)
5208B	FILLER HIT HY150 (FILLER TUBE)
5209B	BIT TE-C+ 11/16-18 (11/16" ø BIT)

** ANCHOR HARDWARE (CONCRETE BASE)		
5204B	50	5/8"ø x 7 1/16" ANCHOR STUD
3310G	50	5/8" LOCKWASHER
3361G	50	5/8" HEX NUT
3300G	50	5/8" FLAT WASHER
☆ 5206B	4	ADHESIVE HIT HY150(CARTRIDGE)
** ANCHOR HARDWARE (ASPHALT BASE)		
6380G	50	5/8"ø x 18" ALL THD ROD
3310G	50	5/8" LOCKWASHER
3361G	50	5/8" HEX NUT
3300G	50	5/8" FLAT WASHER
☆ 5206B	11	ADHESIVE HIT HY150(CARTRIDGE)

** SEE PRODUCT MANUAL

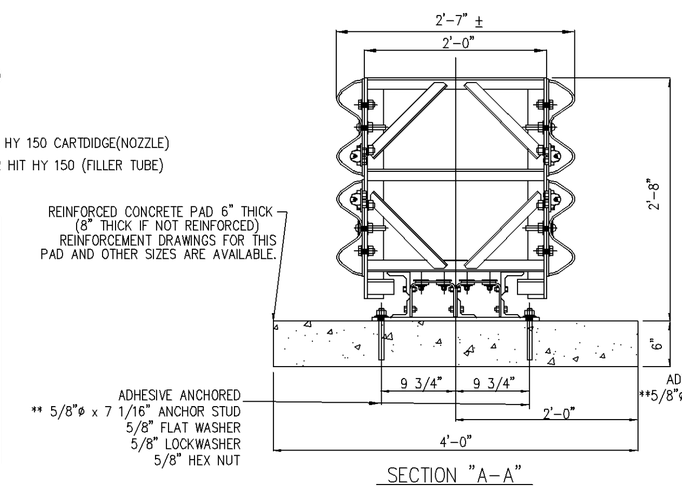

SECTION "A-A"

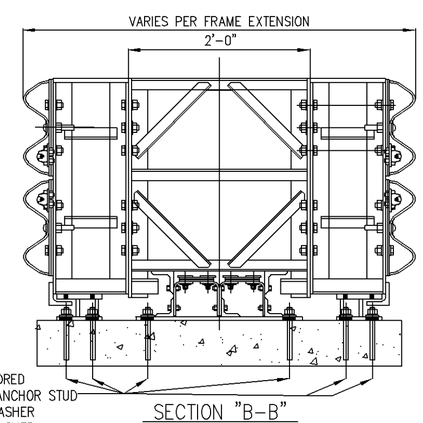

SECTION "B-B"

FOUNDATION NOTE:

6" REINFORCED CONCRETE PAD IS SHOWN

OTHER OPTIONS ARE :

a) 8" THICK MINIMUM UNREINFORCED CONCRETE
b) 8" MINIMUM THICK ASPHALT
c) 3" THICK (MIN) ASPHALT OVER 3" (MIN) CONCRETE
d) 6" THICK ASPHALT OVER 6" COMPACTED SUBBASE.

REV.	CHK'D	BY	DATE	REMARKS

TRACC

58" WIDETRACC DOUBLE FLARE
CRASH-CUSHION ATTENUATING TERMINAL
PLAN, ELEVATION & SECTIONS
(UNIDIRECTIONAL, DIRECT ATTACHMENT)

TRINITY INDUSTRIES, INC.
HIGHWAY SAFETY PRODUCTS
2525 STEMMONS FREEWAY, DALLAS, TX 75207

DRAWN	L.H.
CHECKED	C.C.
APPROVED	
DATE	08-12-05
ENG. FILE #	SS1019-01E
SHT.No.	E1 OF 1
DRAWING NO.	SS1019
REV.	0

COPYRIGHT © 2005 TRINITY INDUSTRIES INC

This drawing and the information shown thereon is the sole property of TRINITY INDUSTRIES, INC. Neither the drawing nor such information is to be used for any purpose other than that for which it was specifically furnished by TRINITY INDUSTRIES, INC., nor is any reproduction authorized without written permission.

TRINITY
HIGHWAY PRODUCTS
ENERGY ABSORPTION SYSTEMS

2525 Stemmons Freeway
Dallas, Texas 75207
888-323-6374 (USA only)
214-589-8140 (Outside USA)
www.energyabsorption.com
www.highwayguardrail.com