PN 626822

Created August 2019

SoftStop® System

Tangent End Terminal with 12" Composite Block

Product Description Assembly Manual

TRINITY HIGHWAY

Ahead of the Curve®

SoftStop® System

Tangent End Terminal with 12” Composite Block

The SoftStop® System Tangent End Terminal (“SoftStop® System”) has been tested to American Association of State and Highway Transportation Officials (“AASHTO”) Manual for Assessing Safety Hardware, 2nd Edition - 2016 (“MASH”) criteria, and is eligible for Federal-aid reimbursement for use on the National Highway System (“NHS”) as a Test Level 1, 2, & 3 device.

Product Description
Assembly Manual

2525 N. Stemmons Freeway
Dallas, TX 75207

Warning: The local highway authority, distributors, owners, and contractors are RESPONSIBLE for the assembly, maintenance, and repair of the SoftStop® System. Failure to fulfill these RESPONSIBILITIES with respect to the assembly, maintenance, and repair of the SoftStop® System could result in serious injury or death.

Important: These instructions are for standard assembly specified by the appropriate highway authority. In the event the specified system assembly, maintenance, or repair would require a deviation from standard assembly parameters, contact a Trinity Highway representative. This system has been deemed eligible by the Federal Highway Administration (“FHWA”) for use on the national highway system under strict criteria utilized by that agency.

This manual must be available, at all times, to the worker overseeing and/or assembling the product. For additional copies, contact Trinity Highway directly at (888) 356-2363 or visit trinityhighway.com.

The instructions contained in this manual supersede all previous information and manuals. All information, illustrations, drawings, and specifications in this manual are based on the latest SoftStop® System information available from the designers of the System to Trinity Highway at the time of printing. We reserve the right to make changes to this manual at any time. Please contact Trinity Highway to confirm that you are referring to the most current instructions.

Part No. 626822
© 2019 Trinity Highway Products, LLC

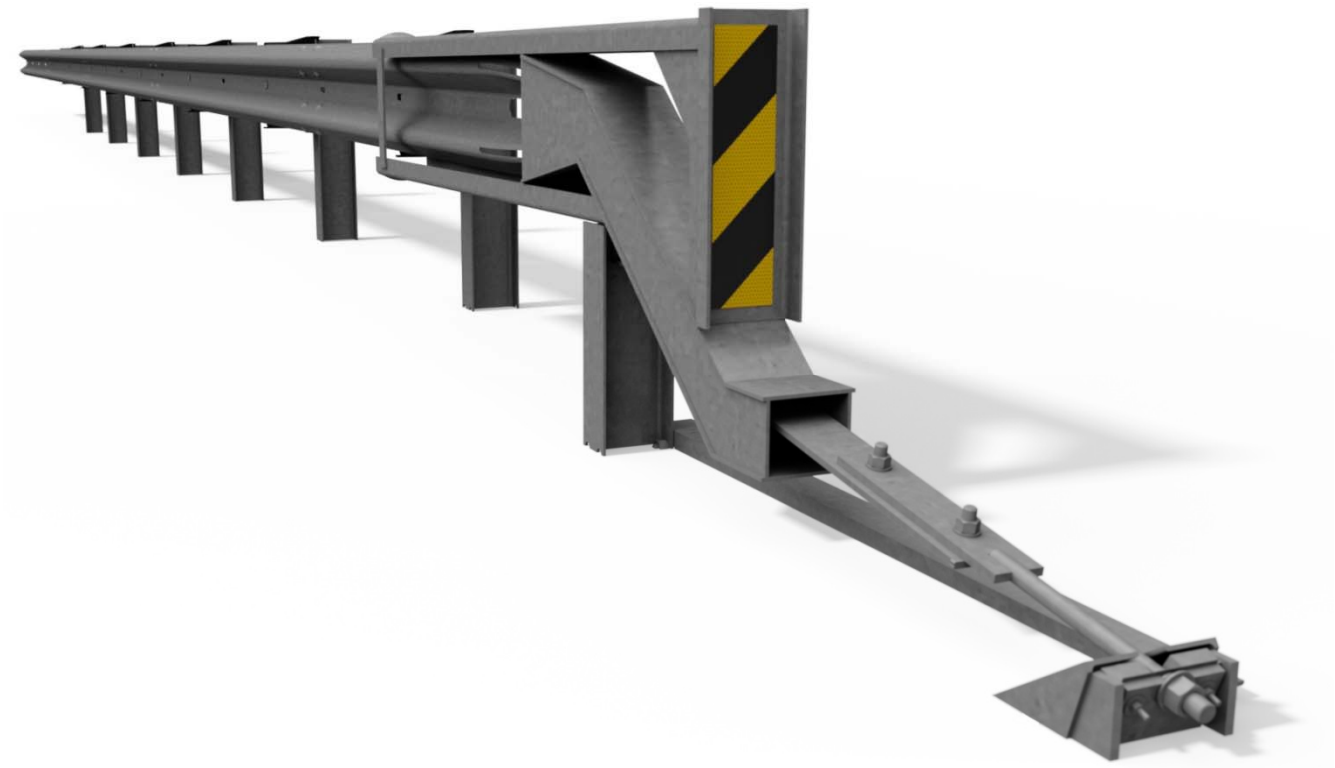

The SoftStop® System features ***FRONT ANCHORED TECHNOLOGY™***, which incorporates an innovative resistive tensile coupling that typically maintains tension in the terminal portion of the guardrail during forward-direction vehicle impacts and releases during a reverse-direction impact.

© 2019 Trinity Highway Products, LLC

Table of Contents

Customer Service Contacts 4
Limitations and Warnings 5
SoftStop® System Overview 6
Inspect Shipment (12'-6" [3.81 m] Panel Options) 8
Inspect Shipment (25'-0" [7.62 m] Panel Option) 9
Recommended Tools 13
SoftStop® System Site Preparation 14
SoftStop® System Offset Requirements 16
SoftStop® System Post Placement 18
SoftStop® System (Test Level 3) - Post Placement Diagram 20
SoftStop® System Anchor Post (Post 0) Placement 21
SoftStop® System Impact Head 22

TEST LEVEL 3 ASSEMBLY STEPS 23

Assembly Inspection Checklist (File With Project Folder) 40
Repair Inspection Checklist (File With Maintenance Records) 41
Routine Inspection Checklist (File With Maintenance Records) 42

Appendix 43
- Offsite Anchor Rail Pre-Assembly Method 43
- Rail Height Transition (27 3/4" to 31") [705 mm to 787 mm] 45
- SoftStop® System (Test Level 2) - Post Placement Diagram 46
- SoftStop® System (Test Level 1) - Post Placement Diagram 47
- SoftStop® Anchor Post (Post 0) Foundation Options 48
- SoftStop® Repair Kit – 12'-6" [3.81 m] Anchor Panel 49
- SoftStop® Repair Kit – 25'-0" [7.62 m] Anchor Panel 50

© 2019 Trinity Highway Products, LLC

Customer Service Contacts

Trinity Highway is committed to the highest level of customer service. Feedback regarding the SoftStop® System, its assembly procedures, supporting documentation, and performance is always welcome. Additional information can be obtained from the contact information below:

Trinity Highway

Telephone:	(888) 356-2363 (USA) +1 214 589 8140 (International)
Fax:	(800) 770-6755 (USA) +1 214 589 8423 (International)
E-mail:	product.info@trin.net
Website:	trinityhighway.com

Trinity Highway Products, LLC
2525 N. Stemmons Freeway
Dallas, Texas 75207

© 2019 Trinity Highway Products, LLC

Limitations and Warnings

Trinity Highway, in compliance with AASHTO MASH, contracts with ISO 17025 A2LA accredited testing laboratories to perform crash tests, evaluate tests, and submit the test results to the FHWA for review.

The SoftStop® System has been deemed eligible for reimbursement by FHWA as meeting the requirements and guidelines of MASH. A component of MASH eligibility requirements include a variety of crash tests to evaluate product performance by simulating certain impact conditions involving lightweight cars (approx. 1100 kg [2420 lb.]) and full size pickup trucks (approx. 2270 kg [5000 lb.]).

The SoftStop® System is eligible for reimbursement at the following test levels:

MASH Test Level 1: 50 km/h [31 mph]
MASH Test Level 2: 70 km/h [44 mph]
MASH Test Level 3: 100 km/h [62 mph]

The SoftStop® System is tested pursuant to the test matrix criteria of MASH as designated by AASHTO and FHWA. The FHWA AASHTO tests are not intended to represent the performance of systems when impacted by every vehicle type or in every impact condition existing on the roadway. Every departure from the roadway is a unique event.

Trinity Highway expressly disclaims any warranty or liability for injury or damage to persons or property resulting from any impact, collision or harmful contact with its products, other vehicles, or nearby hazards or objects by any vehicle, object or person, whether or not the products were assembled in consultation with Trinity Highway or by third parties.

The SoftStop® System is intended to be assembled, delineated, and maintained in accordance with this manual, associated drawings and specific state and federal guidelines. It is the responsibility of the highway authority specifying the use of a highway product to select the most appropriate product configuration for its site specifications.

A highway authority's careful evaluation of the site layout, vehicle population type and speed, traffic direction, and visibility are some of the elements that require evaluation in the selection of a highway product. For example, curbs could cause an untested effect on an impacting vehicle.

After an impact occurs, the debris from the impact should be removed from the area immediately, in compliance with applicable agency policy. The specified SoftStop® System must be evaluated and restored to its original specified condition or replaced as the highway authority determines/requires, as soon as possible. Product selection, approval, proper installation, and maintenance of <u>any</u> highway product is the sole responsibility of the specifying highway authority and the state DOT.

Safety Alert Symbols appear throughout this manual and indicate Danger, Warning, Caution, or Important statements. Failure to read and follow these warnings could result in serious injury or death.

WARNING: Do not assemble, maintain, or repair the SoftStop® System until you have read this manual thoroughly and completely understand it. Ensure that all Danger, Warning, Caution, and Important statements within the manual are completely followed. Please call Trinity Highway at (888) 356-2363 if you do not understand any portion of these instructions or this manual.

WARNING: Safety measures incorporating appropriate traffic control devices and personal protective equipment (PPE) specified by the highway authority must be used to protect all personnel while at the assembly, maintenance, or repair site.

WARNING: Ensure that your assembly site meets all appropriate Manual on Uniform Traffic Control Devices ("MUTCD") and local standards.

WARNING: Use only Trinity Highway parts that are specified by Trinity Highway for use with the SoftStop® System for assembling, maintaining, or repairing the SoftStop® System. <u>Do not utilize or otherwise commingle parts from other systems even if those systems are other Trinity Highway systems.</u> Such configurations have not been tested, nor have they been approved for use. Assembly, maintenance, or repairs using unspecified parts or accessories is strictly prohibited. Failure to follow this warning could result in serious injury or death in the event of a vehicle impact with such an UNACCEPTED system.

WARNING: Do NOT modify the SoftStop® System in any way.

IMPORTANT: Trinity Highway makes no recommendation whether use or reuse of any part of the SoftStop® System is appropriate or acceptable following an impact. It is the sole responsibility of the local highway authority and its engineers to make that determination. It is critical that the applicable owner/agency/specifier inspect the SoftStop® System after assembly is complete to make certain that the instructions provided in this manual have been strictly followed.

© 2019 Trinity Highway Products, LLC

SoftStop® System Overview

The SoftStop® System is a tangent, single-sided, energy-absorbing, re-directive and gating end terminal system. The SoftStop® System is the first end terminal to meet the evaluation criteria set forth in AASHTO MASH. The SoftStop® System is a 31" [787 mm] high (measured from top of rail to finished grade) end terminal used to shield 31" [787 mm] high strong post w-beam guardrail. The SoftStop® System may be used to terminate strong post W-beam guardrail with mounting heights measuring 27 3/4" [705 mm] to 31" [787 mm] utilizing a state/specifier approved height transition (see Appendix for examples). The splice beyond Post 8 may either be a mid-span splice or located on a standard guardrail post.

The SoftStop® System consists of a SoftStop® Impact Head, SoftStop® Anchor Rail, SoftStop® Anchor Post (Post 0), SoftStop® Angle Strut, SoftStop® Anchor Paddle, SoftStop® Plate Washer, SoftStop® Keeper Plate, two (2) SoftStop® Anchor Angles, two (2) Steel Yielding Terminal Posts ("SYTP®") (Posts 1 & 2) and required hardware accessories. The remaining length of the system beyond Post 2 (SYTP® Post 6'0" [1830 mm]) consists of 6' [1830 mm] System Line Posts, System Rail, and **may use** 12" [305 mm] **OR** 8" [203 mm] Composite Offset Blocks.

Warning: Composite Offset Blocks are NOT interchangeable within the SoftStop® System. If assembling a SoftStop® System with 8" [203 mm] Composite Blocks, <u>ensure</u> you are using the SoftStop® System manual PN 620237.

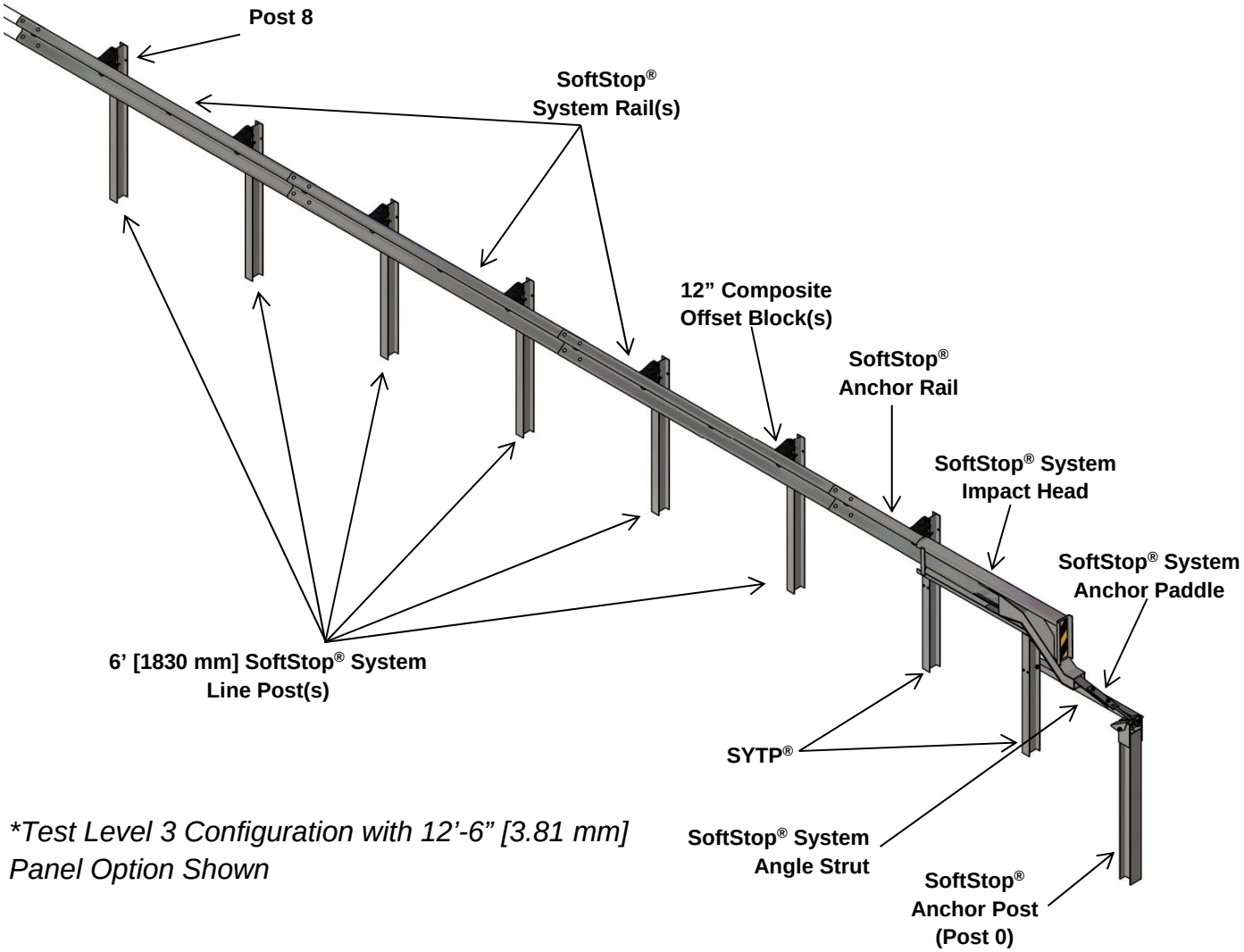

**Test Level 3 Configuration with 12'-6" [3.81 mm] Panel Option Shown*

© 2019 Trinity Highway Products, LLC

The SoftStop® System can be assembled in a MASH Test Level 1, Test Level 2 or Test Level 3 configuration.

Test Level	Design Speed	Required System Length	Posts
Test Level 3	62 mph [100 km/h]	50’-9 1/2" [15.48 m]	Posts 0-8
Test Level 2	44 mph [70 km/h]	38’-3 1/2" [11.67 m]	Posts 0-6
Test Level 1	31 mph [50 km/h]	25’-9 1/2" [7.86 m]	Posts 0-4

Test Level 3 (50’-9 1/2") [15.48 m]

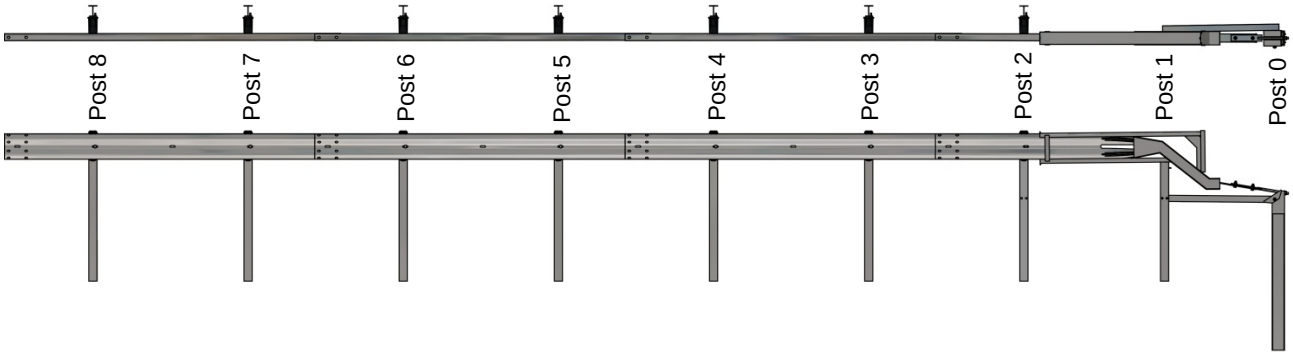

Test Level 2 (38’-3 1/2") [11.67 m]

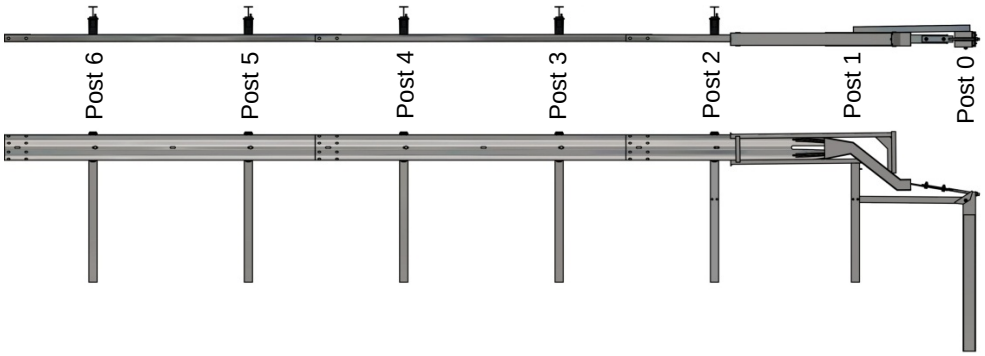

Test Level 1 (25’-9 1/2") [7.86 m]

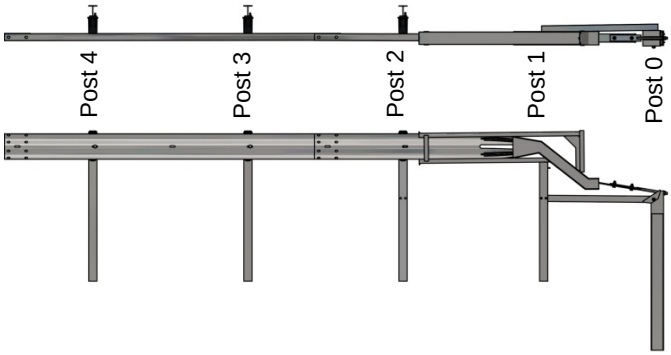

Note: 12’-6” [3.81 m] Panel Option depicted above

© 2019 Trinity Highway Products, LLC

Inspect Shipment (12’-6” [3.81 m] Panel Options)

Before assembling the SoftStop® System, carefully unpack and inspect all components for signs of damage. Check the received parts against the packing list supplied with the system to verify that all parts were received. If parts are damaged or missing from the shipment or unspecified parts were part of the shipment, do not attempt to assemble the system; contact Trinity Highway immediately.

Warning: Use only Trinity Highway parts that are specified by Trinity Highway for use with the SoftStop® System for assembling, maintaining, or repairing the SoftStop® System. <u>Do not utilize or otherwise commingle parts from other systems even if those systems are other Trinity Highway systems.</u>

ID	COMPONENT	PN	TL-3 QTY	TL-2 QTY	TL-1 QTY
A	SoftStop® Impact Head	15208A	1	1	1
B	SoftStop® Anchor Rail 12’-6” [3.81 m]	15200G	1	1	1
C	System Rail 12’-6” [3.81 m]	11G	3	2	1
D	SoftStop® Anchor Post (Post 0)	15205A	1	1	1
E	SoftStop® SYTP® 4’-9 1/2" [146 mm]	15203G	1	1	1
F	SYTP® Post 6’-0” [1830 mm]	15000G	1	1	1
G	System Line Post 6’-0” [1830 mm]	533G	6	4	2
H	12” [305 mm] Composite Offset Block	6740B	7	5	3
I	SoftStop® Anchor Paddle	15204A	1	1	1
K	SoftStop® Keeper Plate	15207G	1	1	1
L	SoftStop® Plate Washer	15206G	1	1	1
M	SoftStop® Anchor Angle	15201G	2	2	2
N	SoftStop® Angle Strut	15202G	1	1	1
O	5/16” x 2.5” Hex Bolt	105285G	2	2	2
P	5/16” x 1.5” Hex Bolt	105286G	1	1	1
Q	3/4" x 2.5” Hex Bolt	3717G	2	2	2
R	5/8” x 9” Hex Bolt	4489G	1	1	1
S	5/8” x 1.75” Hex Bolt	3391G	1	1	1
T	5/8” x 14” GR Bolt	3540G	7	5	3
U	5/8” x 1.25” GR Bolt	3360G	32	24	16
V	1” Round Washer	4902G	1	1	1
W	3/4” Round Washer	3701G	4	4	4
X	5/8” Round Washer	4372G	4	4	4
Y	5/16” Round Washer Wide	3240G	6	6	6
Z	1” Heavy Hex Nut	3908G	1	1	1
AA	3/4” Heavy Hex Nut	3704G	2	2	2
BB	5/8” GR Hex Nut	3340G	41	31	21
CC	5/16” Hex Nut	3245G	3	3	3

© 2019 Trinity Highway Products, LLC

Inspect Shipment (25’-0” [7.62 m] Panel Option)

Before assembling the SoftStop® System, carefully unpack and inspect all components for signs of damage. Check the received parts against the packing list supplied with the system to verify that all parts were received. If parts are damaged or missing from the shipment or unspecified parts were part of the shipment, do not attempt to assemble the system; contact Trinity Highway immediately.

Warning: Use only Trinity Highway parts that are specified by Trinity Highway for use with the SoftStop® System for assembling, maintaining, or repairing the SoftStop® System. Do not utilize or otherwise commingle parts from other systems even if those systems are other Trinity Highway systems.

ID	COMPONENT	PN	TL-3 QTY
A	SoftStop® Impact Head	15208A	1
EE	SoftStop® Anchor Rail 25’-0” [7.62 m]	15215G	1
DD	System Rail 25’-0” [7.62 m]	61G	1
D	SoftStop® Anchor Post (Post 0)	15205A	1
E	SoftStop® SYTP® 4’-9 1/2" [1460 mm]	15203G	1
F	SYTP® Post 6’-0” [1830 mm]	15000G	1
G	System Line Post 6’-0” [1830 mm]	533G	6
H	12” [305 mm] Composite Offset Block	6740B	7
I	SoftStop® Anchor Paddle	15204A	1
K	SoftStop® Keeper Plate	15207G	1
L	SoftStop® Plate Washer	15206G	1
M	SoftStop® Anchor Angle	15201G	2
N	SoftStop® Angle Strut	15202G	1
O	5/16” x 2.5” Hex Bolt	105285G	2
P	5/16” x 1.5” Hex Bolt	105286G	1
Q	3/4" x 2.5” Hex Bolt	3717G	2
R	5/8” x 9” Hex Bolt	4489G	1
S	5/8” x 1.75” Hex Bolt	3391G	1
T	5/8” x 14” GR Bolt	3540G	7
U	5/8” x 1.25” GR Bolt	3360G	16
V	1” Round Washer	4902G	1
W	3/4” Round Washer	3701G	4
X	5/8” Round Washer	4372G	4
Y	5/16” Round Washer Wide	3240G	6
Z	1” Heavy Hex Nut	3908G	1
AA	3/4” Heavy Hex Nut	3704G	2
BB	5/8” GR Hex Nut	3340G	25
CC	5/16” Hex Nut	3245G	3

© 2019 Trinity Highway Products, LLC

ID: A	PN: 15208A	ID: B	PN: 15200G	ID: C	PN: 11G
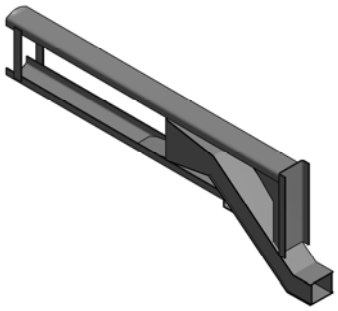		**(Slotted End Shown For Detail)**		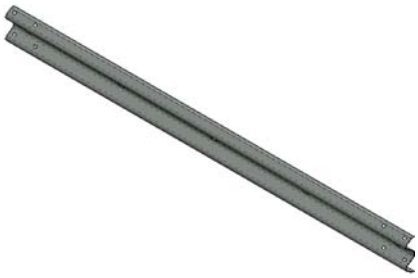	
SoftStop® Impact Head		SoftStop® Anchor Rail 12’-6”		System Rail 12’-6”	

ID: D	PN: 15205A	ID: E	PN: 15203G	ID: F	PN: 15000G
Post 0 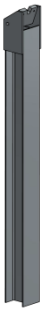		Post 1 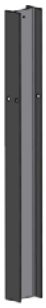		Post 2	
SoftStop® Anchor Post		SoftStop® SYTP 4’-9 1/2"		SYTP® 6’-0” Post	

ID: G	PN: 533G	ID: H	PN: 6740B	ID: I	PN: 15204A
Posts 3-8				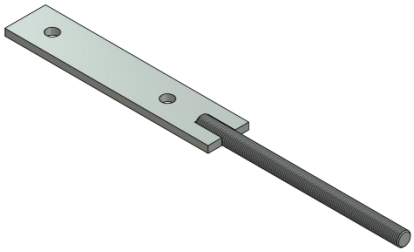	
System Line Post 6’-0”		12” Composite Offset Block		SoftStop® Anchor Paddle	

ID: K	PN: 15207G	ID: L	PN: 15206G	ID: M	PN: 15201G
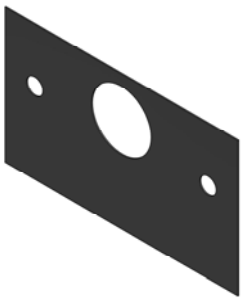		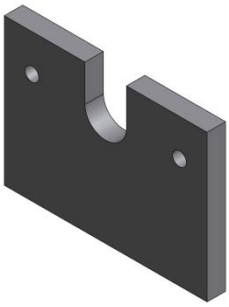		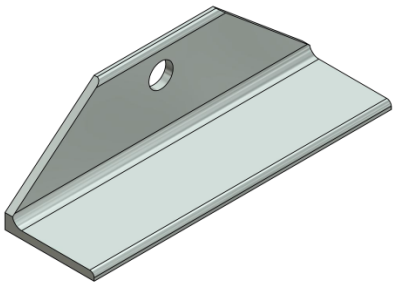	
SoftStop® Keeper Plate		SoftStop® Plate Washer		SoftStop® Anchor Angle	

© 2019 Trinity Highway Products, LLC

ID: N	PN: 15202G	ID: O	PN: 105285G	ID: P	PN: 105286G
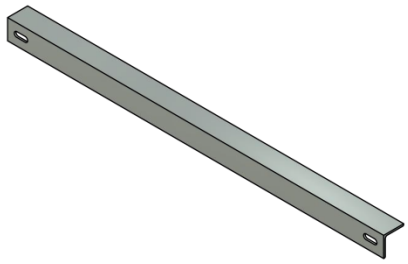		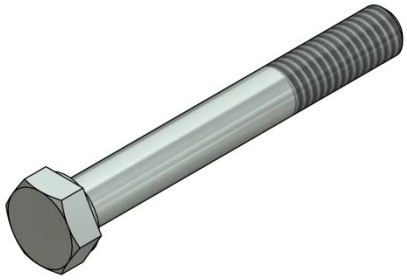		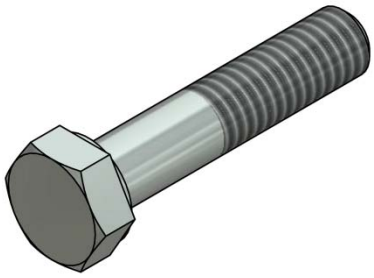	
SoftStop® Angle Strut		5/16” x 2.5” Hex Bolt		5/16” x 1.5” Hex Bolt	

ID: Q	PN: 3717G	ID: R	PN: 4489G	ID: S	PN: 3391G
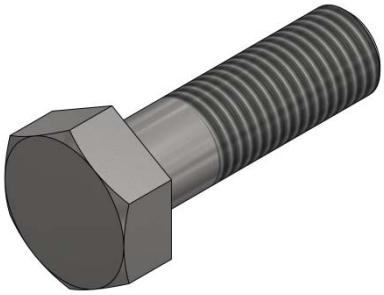		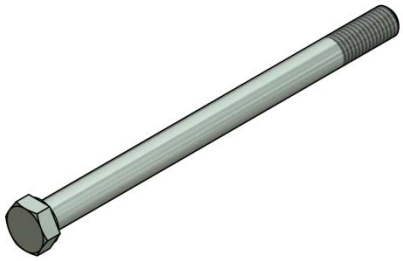		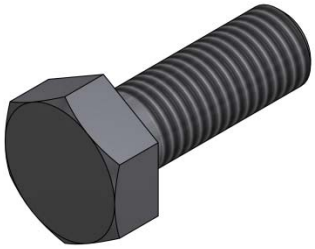	
3/4” x 2.5” Hex Bolt		5/8” x 9” Hex Bolt		5/8” x 1.75” Hex Bolt	

ID: T	PN: 3540G	ID: U	PN: 3360G	ID: V	PN: 4902G
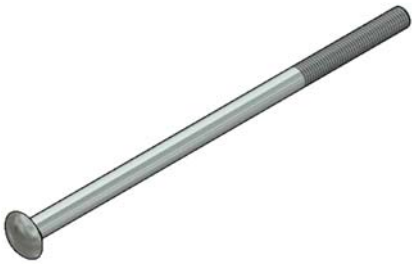		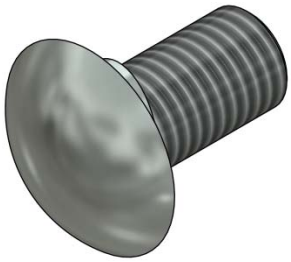			
5/8” x 14” GR Bolt		5/8” x 1.25” GR Bolt		1” Round Washer	

ID: W	PN: 3701G	ID: X	PN: 4372G	ID: Y	PN: 3240G
		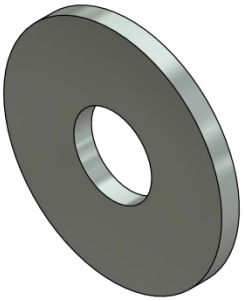		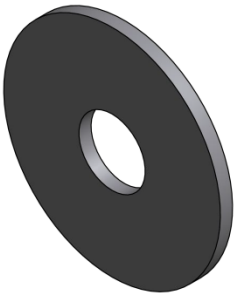	
3/4” Round Washer		5/8” Round Washer		5/16” Round Washer Wide	

© 2019 Trinity Highway Products, LLC

ID: Z	PN: 3908G	ID: AA	PN: 3704G	ID: BB	PN: 3340G
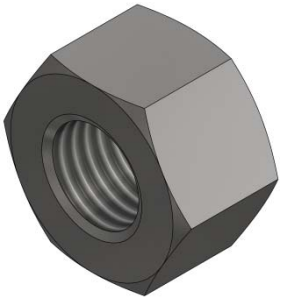		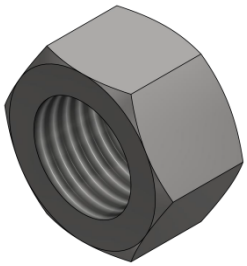		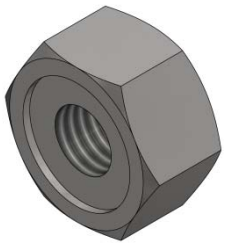	
1” Heavy Hex Nut		3/4" Heavy Hex Nut		5/8” GR Hex Nut	

ID: CC	PN: 3245G	ID: DD	PN: 61G	ID: EE	PN: 15215G
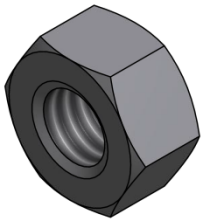				**(Slotted End Shown For Detail)**	
5/16” Hex Nut		System Rail 25’-0”		SoftStop® Anchor Rail 25’-0”	

NOT included - Optional SoftStop® System Parts:

5851B	“LEFT”	Delineator Impact Head Sheeting
5852B	“RIGHT”	Delineator Impact Head Sheeting

Trinity Highway makes no guarantees these optional delineator impact head sheeting(s) meet the minimum specifications, comply with MUTCD requirements or comply with state/specifying agency requirements.

00-SOFTSTOPKIT-011 SoftStop® Repair Kit – 12’-6” [3.81 m] SoftStop® Anchor Panel
See Appendix for Bill of Materials (p. 49).

00-SOFTSTOPKIT-013 SoftStop® Repair Kit – 25’-0” [7.62 m] SoftStop® Anchor Panel
See Appendix for Bill of Materials (p. 50).

WARNING: Use only Trinity Highway parts that are specified by Trinity Highway for use with the SoftStop® System for assembling, maintaining, or repairing the SoftStop® System. <u>Do not utilize or otherwise commingle parts from other systems even if those systems are other Trinity Highway systems.</u>

© 2019 Trinity Highway Products, LLC

Recommended Tools

Documentation

- Assembly Manual (Most Current Version)
- System Drawing (Most Current Version)

Personal protective equipment (PPE)

- Safety Glasses
- Work Gloves
- Safety-Toe Shoes
- Back Protection
- Hard Hat
- Reflective Vest

Miscellaneous

- Traffic Control Equipment and Plan per local standards and the MUTCD
- SAE Combination Wrench Set
- Socket Set & Socket Wrench
- Hammer
- Chalk Line
- Tape Measure
- Marking Paint and Pen
- Straight Edge
- Level
- Plumb Line
- Post Pounder (commonly used for driving posts)
- Auger
- Soil Tamper
- Come-Along Puller
- 5/8” Alignment Tool (Drift Pin)
- Abrasive Blade Cutting Device
- Locking Pliers
- C-Clamps

Note: The above list of tools is a general recommendation only and should not be considered an exhaustive list. Depending on specific site conditions and the complexity of the assembly (or repair) specified by the appropriate highway authority, additional or fewer tools may be required. Decisions as to what tools are needed to perform the job are entirely within the discretion of the specifying highway authority and the authority’s selected contractor performing the assembly of the system at the authority’s specified site.

© 2019 Trinity Highway Products, LLC

SoftStop® System Site Preparation

The SoftStop® System is a tangent, single-sided, energy-absorbing, re-directive and gating end terminal system. It may be specified for use by the appropriate state/specifying authority in conjunction with strong post W-beam guardrail systems on the shoulder or median of a roadway. The decision to specify the SoftStop® System for a particular project is the responsibility of the state/specifying agency design engineer who must ensure that the most appropriate end terminal has been selected for the specific site conditions.

The SoftStop® System is designed to be attached to strong post W-beam guardrail systems that have been accepted under MASH or NCHRP Report 350 crash test criteria that use either no offset blocks, 8" [203 mm] offset blocks or 12" [305 mm] offset blocks.

Important: The SoftStop® System must not be attached directly to a weak post W-beam guardrail system without an approved weak-post-to-strong-post transition plus a minimum of 12'-6" [3.81 m] strong post single-ply 12 gauge W-beam guardrail with 6'-3" [1905 mm] post spacing. The 12'-6" [3.81 m] strong post W-beam guardrail must be placed between the SoftStop® System and the weak-post-to-strong-post transition.

Important: The SoftStop® System must not be attached directly to Thrie Beam, Thrie Beam Transition, or to a post which is stronger/stiffer than a standard W-beam W6x8.5# [W150x13] or W6x9# [W150x13.5] guardrail post. A minimum of 6'-3" [1.905 m] strong post single-ply 12 gauge W-beam guardrail must be placed between the SoftStop® System and the Thrie Beam transition (or stronger/stiffer post).

Important: Do not attach the SoftStop® System directly to a rigid barrier (i.e. concrete barrier, wall or bridge pier) without the use of a state/specifying agency approved transition.

Important: It is the responsibility of the state/specifying agency design engineer to ensure that the SoftStop® System assembly conforms to the AASHTO Roadside Design Guide.

Important: <u>Trinity Highway does not direct grading</u>. Proper site grading must be accomplished before assembly of the SoftStop® System in accordance with local specifying agency guidelines OR the AASHTO Roadside Design Guide (p. 15), whichever is more stringent. Failure to follow this warning could result in serious injury or death in the event of a vehicle impact or collision.

Important: The Beginning Length of Need ("BLON") for the SoftStop® System was established during MASH Test 3-35 as Post #3, which is 16'-6" [5.029 m] from the center of Post #0.

Important: A minimum of 50' [15.24m] of strong post W-beam guardrail with 6'-3" [1905 mm] post spacing, must be placed between "back-to-back" SoftStop® Systems, regardless of the SoftStop® System Test Level selected.

© 2019 Trinity Highway Products, LLC

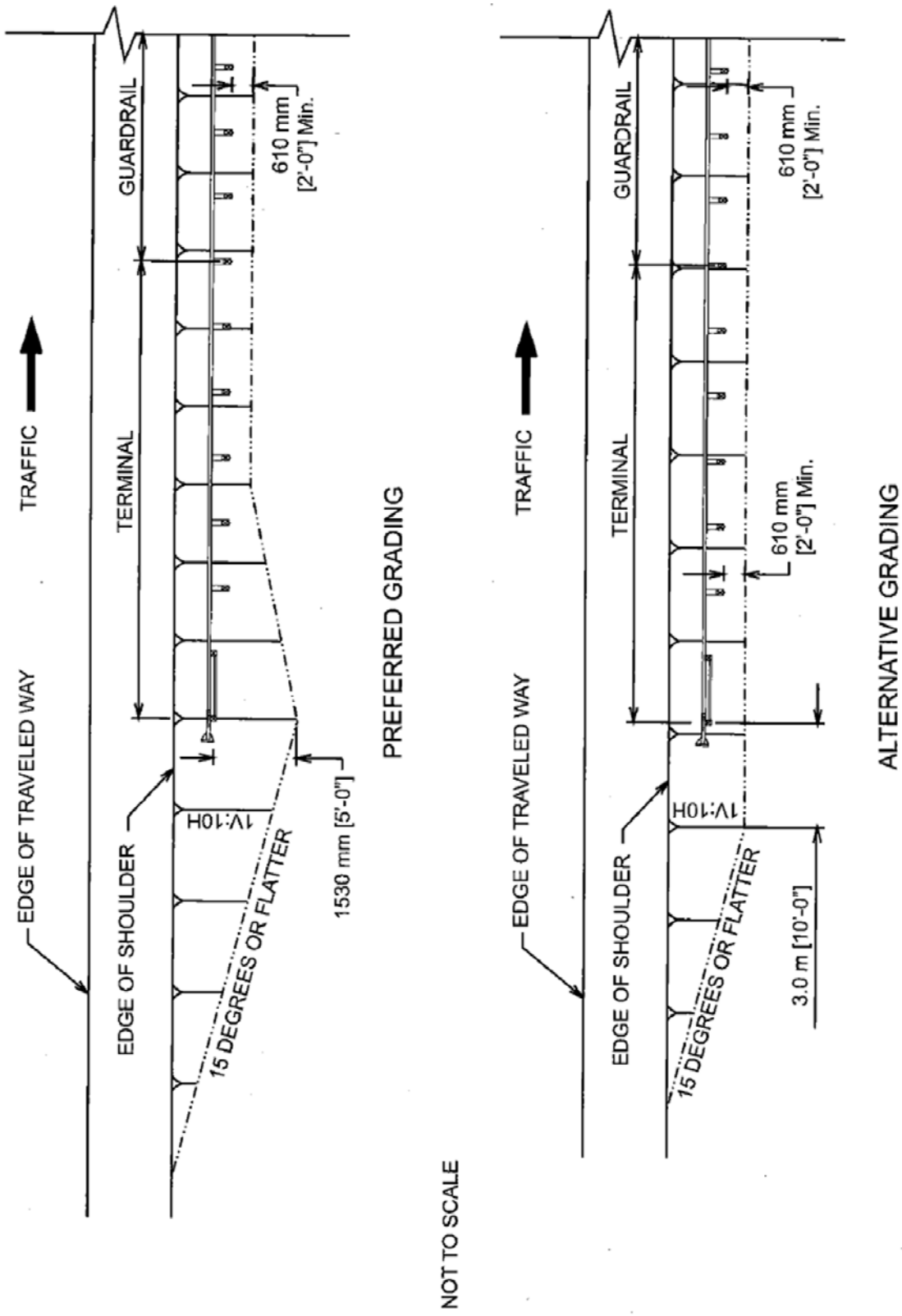

Drawing Source: AASHTO Roadside Design Guide, 4th Edition 2011

© 2019 Trinity Highway Products, LLC
Created August 2019

SoftStop® System Offset Requirements

The SoftStop® System is a tangent guardrail end treatment that is assembled parallel to the edge of shoulder. At the sole discretion of the state/specifying agency design engineer, the SoftStop® System may be offset away from the shoulder over the length of the entire system (from center of last splice location of SoftStop® System to center of Post 0) per the following designer approved offsets:

Test Level 1 (TL-1)	Test Level 2 (TL-2)	Test Level 3 (TL-3)
6” [152 mm] Maximum	**1’ [304 mm] Maximum**	**2’ [609 mm] Maximum**

Examples shown below are of a Test Level 3 (TL-3) SoftStop® System Assembly:

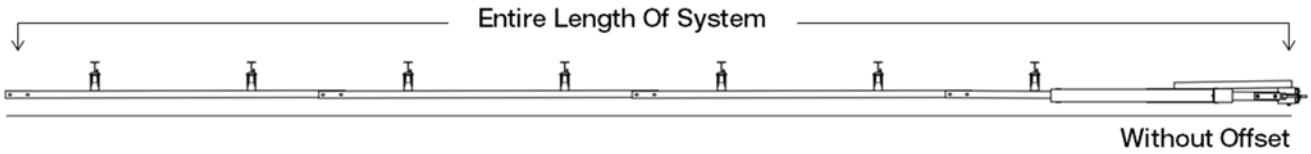

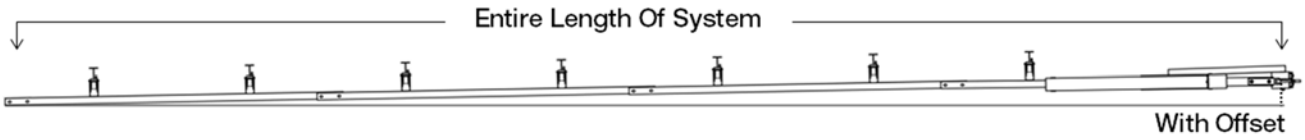

Caution: Under no circumstances shall the rail within the SoftStop® System be curved, between Post 0 and the last post of the SoftStop® System.

Offset Requirements Within A Curve

When the guardrail is terminated within a curve (convex or concave) and a SoftStop® System is attached, the following instructions must be followed to ensure proper offset requirements within a curve for the SoftStop® System are met.

If the state/specifying agency has an established policy for the installation of tangential guardrail end terminals, it should be followed. If the state/specifying agency does NOT have an established policy, the SoftStop® designer’s recommendation shall be utilized.

NOTE: The AASHTO Roadside Design Guide, 4th Edition (2011) – Chapter 10 provides limited general guidance in regards to Roadside Safety in a Urban or Restricted Environments, which may be of use to the state/specifying design engineer.

© 2019 Trinity Highway Products, LLC

Caution: ALL offset requirements in a curve shall be calculated for a TL-3 SoftStop® System. If assembling a TL-1 or TL-2 SoftStop® System, an overall straight length of 50'-9 1/2" [15.48 m] must be obtained (SoftStop® System + Strong Post W-Beam Guardrail) for calculating offset requirements in a curve.

For a convex or concave curve, the following radii criteria have been determined to keep the SoftStop® System from encroaching onto the shoulder when installed at the leading edge of the shoulder.

- **Convex Curves**:
  With NO shoulder encroachment.
  - For radii of 650 feet [198 m] or greater (flatter), the SoftStop® designers recommend an offset between 0 feet [0 m] to 2 feet [609 mm].

- **Concave Curves:**
  With NO shoulder encroachment.
  - For radii between 500 feet [152 m] and 750 feet [228 m], the SoftStop® designers recommend an offset between 0 feet [0 m] to 1.5 feet [457 mm].
  - For radii greater (flatter) than 750 feet [228 m], the SoftStop® designers recommend an offset of 0 feet [0 m] to 2 feet [609 mm].

Caution: Using an offset closer to 0 feet [0 m] on tighter curves/radii will cause the SoftStop® System to encroach onto the shoulder.

Caution: Under no circumstances shall the maximum offset of 2 feet [609 mm] for a TL-3 SoftStop® System be exceeded.

Caution: Under no circumstances shall the rail within the SoftStop® System be curved, between Post 0 and the last post of the SoftStop® System.

Caution: If the state/specifying agency policy and/or SoftStop® System designer's recommendations cannot be achieved, extend the guardrail until the conditions can be met.

© 2019 Trinity Highway Products, LLC

SoftStop® System Post Placement

Danger: Ensure all above and below ground utilities as well as drainage structures are located, marked, and identified prior to using an auger or post pounding equipment in accordance with local specifying agency guidelines. Failure to follow this warning could result in serious injury or death.

Determine Post Locations

Use a level or straight edge on the face of downstream guardrail (i.e. traffic side) to establish the face of guardrail reference line. The reference line will be used to determine various SoftStop® System post locations.

The last post of the SoftStop® System will be located 20 5/8" [524 mm] from face of downstream guardrail to accommodate an 12" [305 mm] nominal composite offset block and be spaced 6'-3" [1905 mm] (typical) on center from the first post of the strong post w-beam system (see drawing below). Refer to the post placement diagrams in this manual for remaining post locations.

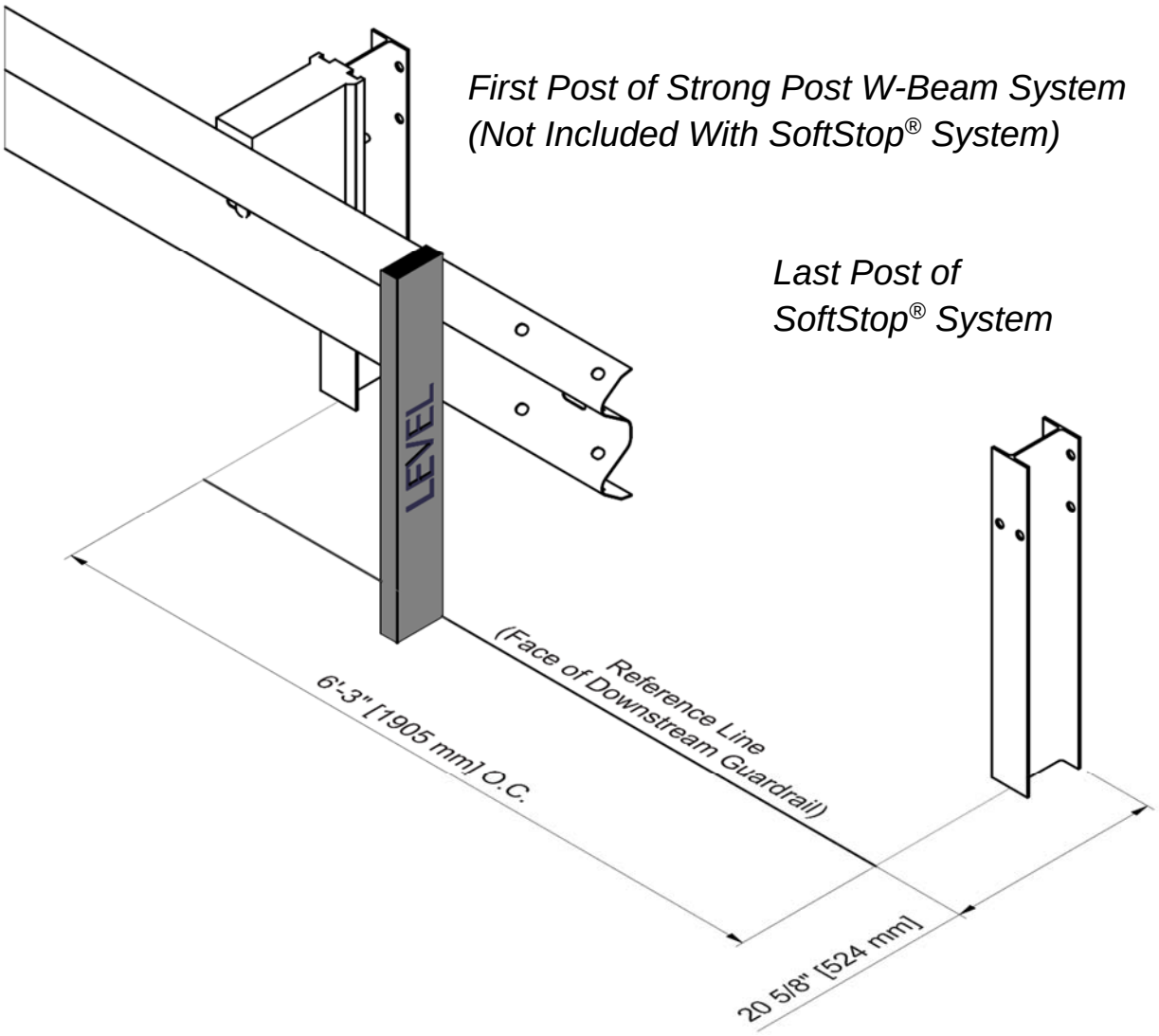

© 2019 Trinity Highway Products, LLC

The SoftStop® System posts may be inserted into the soil using an auger or post pounding equipment used for the placement of guardrail posts. If an auger is used, ensure diameter is large enough to allow for proper compaction of state/specifying agency approved fill material. All SoftStop® System posts are to be assembled within established standard construction tolerances for plumb. Proper compaction must be accomplished for all posts in accordance with state/specifying agency guidelines.

If rigid pavement (e.g. concrete or asphalt) of <u>any thickness</u> is encountered at post locations 1-8, ensure a proper "leave-out" area (the specified size of open space as defined in the AASHTO Roadside Design Guide) is provided around the posts and filled with state/specifying agency approved backfill material.

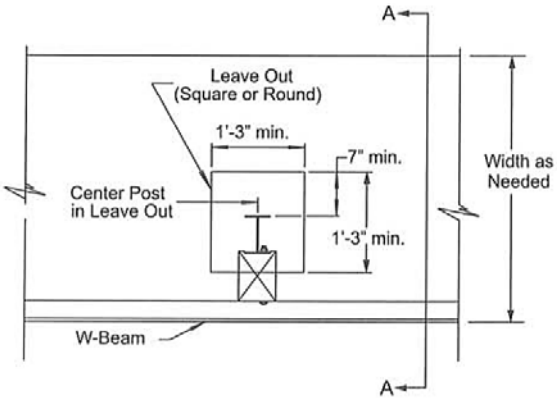

Steel Post Detail

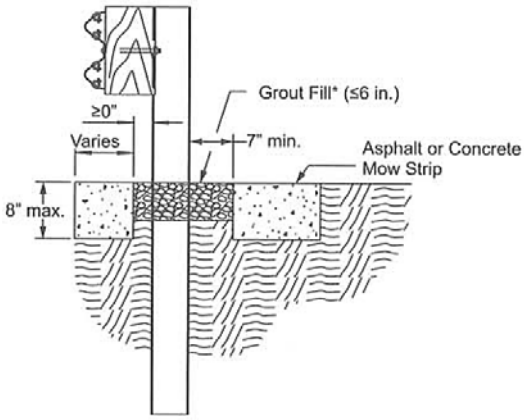

Section A-A

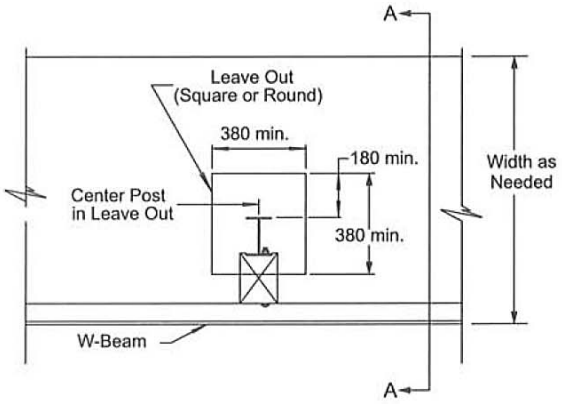

Steel Post Detail (Metric)

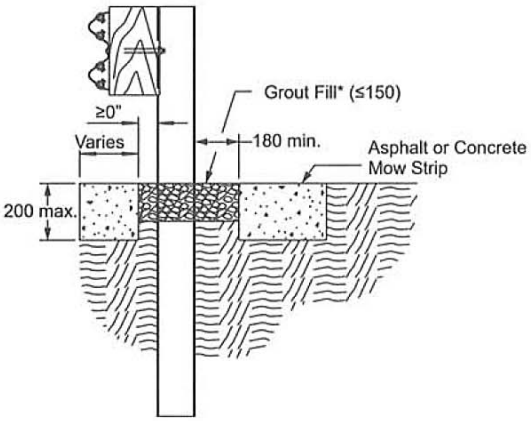

Section A-A

*Grout fill material must have a 28-day compressive strength of 120 psi (0.85 MPa) or less.

Drawing Source: AASHTO Roadside Design Guide, 4th Edition 2011

If rock is encountered at post locations 2-8, refer to the local specifying agency guidelines and the AASHTO Roadside Design Guide for requirements for embedment depth into the rock and size of the hole. <u>If rock is encountered at post locations 0-1, auger a hole in the rock large enough for full post embedment and proper compaction of approved fill material.</u> Alternative SoftStop® Anchor Post (Post 0) Foundation Options are shown in the Appendix, if approved by the state/specifying agency for use.

© 2019 Trinity Highway Products, LLC

SoftStop® System (Test Level 3) - Post Placement Diagram

For 12” [305 mm] composite Block Assembly

See Appendix for SoftStop® System Test Level 2 and Test Level 1 Post Placement Diagrams

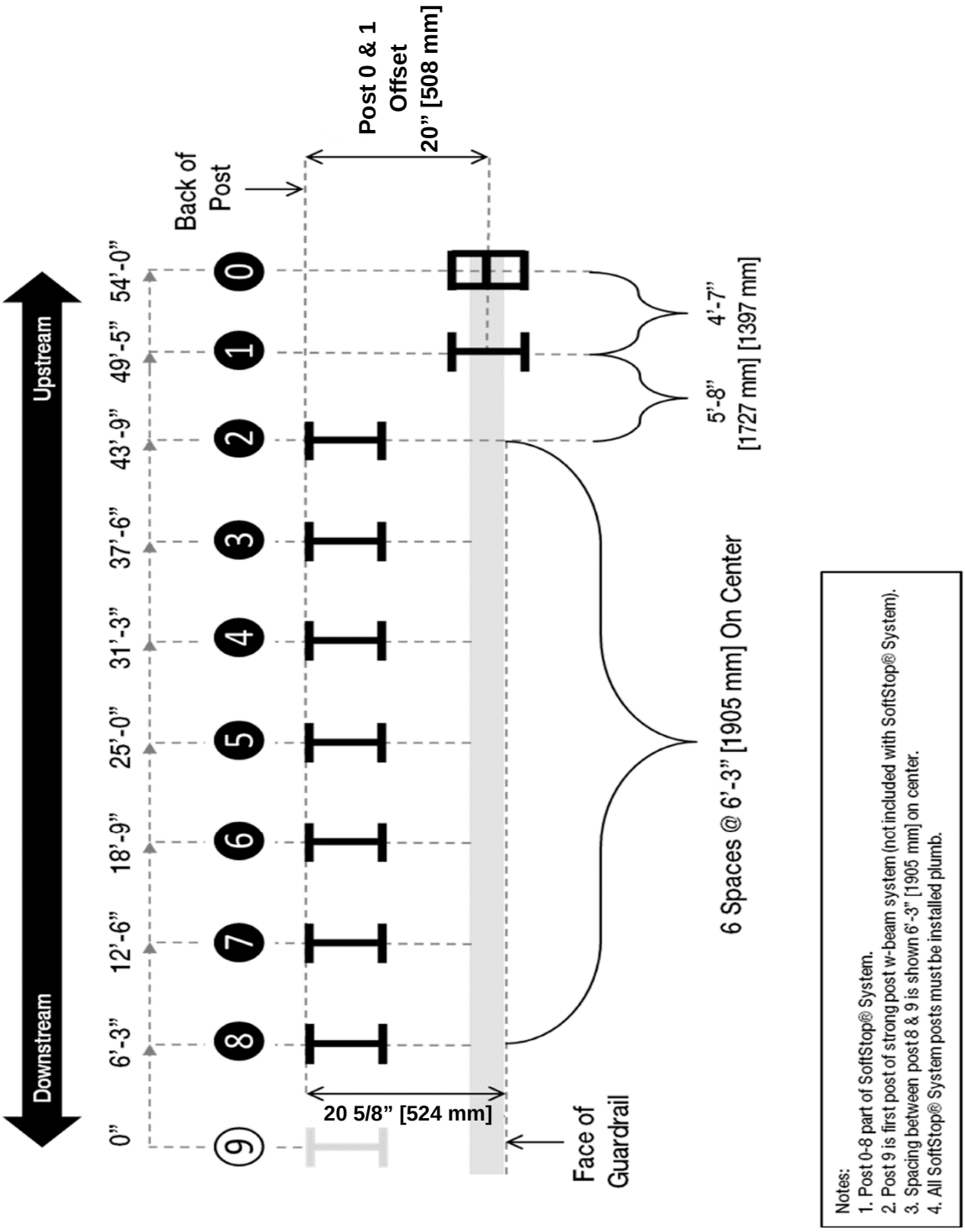

All posts within the SoftStop® System are fabricated from W6x8.5# [W150x13] or W6x9# [W150x13.5] Structural Beam, with the exception of Post #0, which is fabricated from W6x15# [W150x22] Structural Beam.

© 2019 Trinity Highway Products, LLC

SoftStop® System Anchor Post (Post 0) Placement

The SoftStop® System Anchor Post (15205A) is the first post of the SoftStop® System and is designated as Post 0. The SoftStop® System Anchor Post is to be assembled plumb and oriented with the front side of post facing towards the upstream end. The SoftStop® Anchor Post is fabricated from W6x15# [W150x22] Structural Beam approximately 6'-4 7/8" [1953 mm] in length from top of the side plates to bottom of the embedded portion.

A. When assembled to the correct depth (approximately 6'-1 3/8" [1864 mm]), the SoftStop® System Anchor Post stub will protrude 3 1/2" [89 mm] above the finished grade line (see Step 2 of this Assembly Manual). See Figure A, below.

B. When fully assembled, the SoftStop® System Anchor Post (with SoftStop® Anchor Angles) will protrude 4" [102 mm] above the finished grade line (see Step 12 of this Assembly Manual). See Figure B, below.

C. Alternative SoftStop® Anchor Post (Post 0) Foundation Options are shown in the Appendix. These are to only be utilized in the case of an assembly where the full depth installation of the SoftStop® Anchor Post cannot be achieved, due to a significant underground obstacle. All alternative options require minimum 2,800 psi [19.3 MPa] reinforced concrete foundations of various depths and diameters.

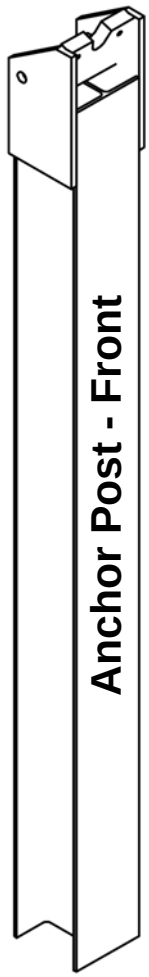

A. Anchor Post Stub at Correct Height

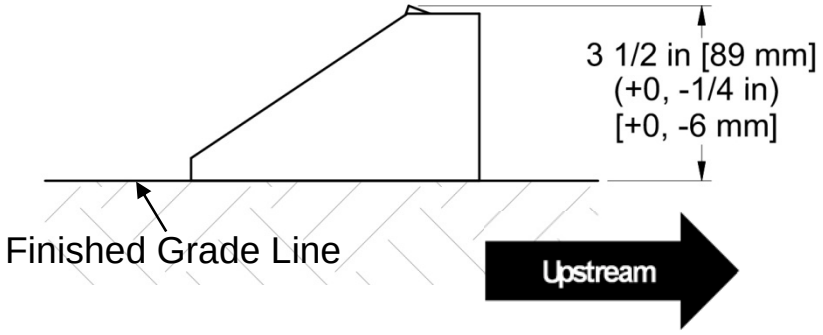

B. Anchor Post (Fully Assembled) at Correct Height

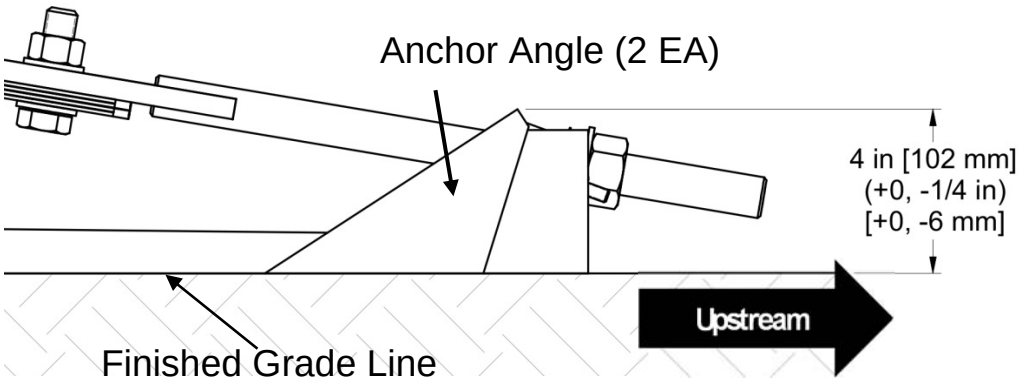

Caution: Ensure the SoftStop® System Anchor Post is assembled in the orientation shown above. Failure to follow this warning could result in serious injury or death in the event of a vehicle impact or collision with the system.

© 2019 Trinity Highway Products, LLC

SoftStop® System Impact Head

The SoftStop® Impact Head (15208A) component is symmetrical and can be assembled on the left or right shoulder. The diagram below lists some of the subcomponents of the Impact Head.

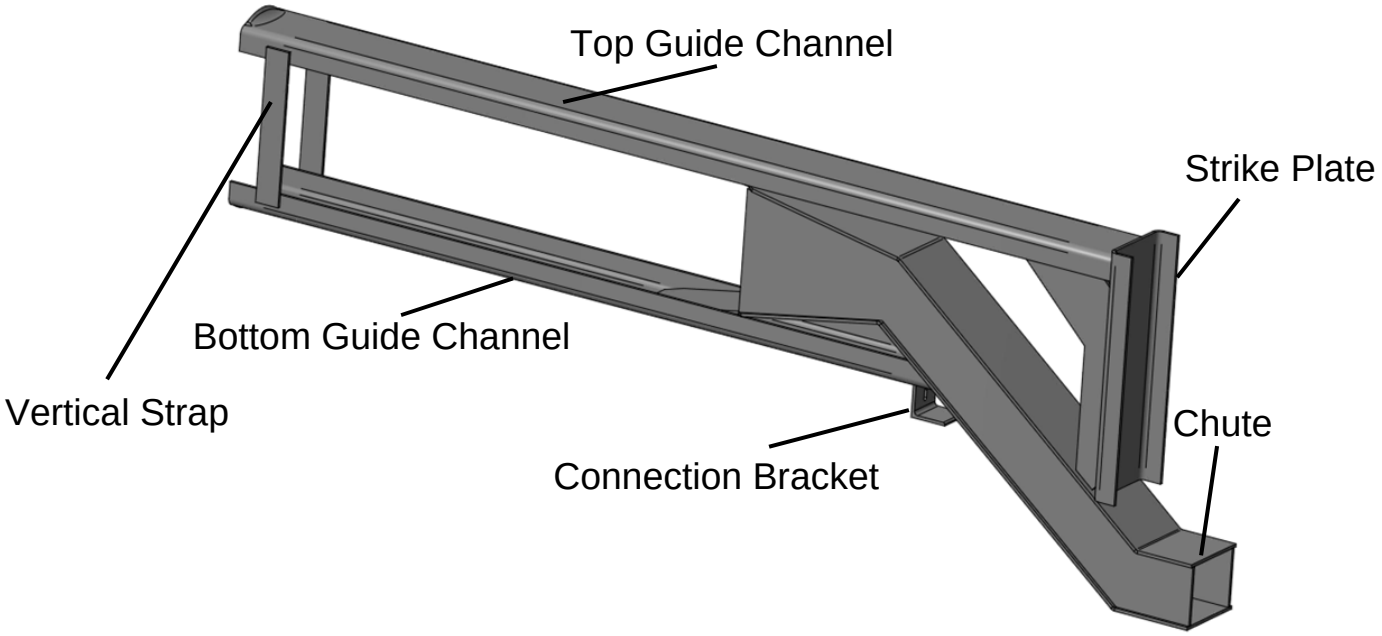

When properly assembled, the SoftStop® Impact Head shall only be assembled parallel to the finished grade line or have an upward tilt (towards front of the system). Point A is measured from the finished grade line to where the corner of the side plate connects with the top guide channel and Point B is measured from the finished grade line to where the inside corner of the vertical strap connects with the top guide channel.

The SoftStop® Impact Head shall be installed such that the difference between the vertical dimensions at these two reference points (**A – B**) equals 2 1/4" [58 mm], with a tolerance of **+** 1 1/4" [32 mm] **–** 2 1/4" [58 mm]. **Thus, the nominal value for A – B is 2 1/4" [58 mm] and the range is 0" [0 mm] to 3 1/2" [89mm].**

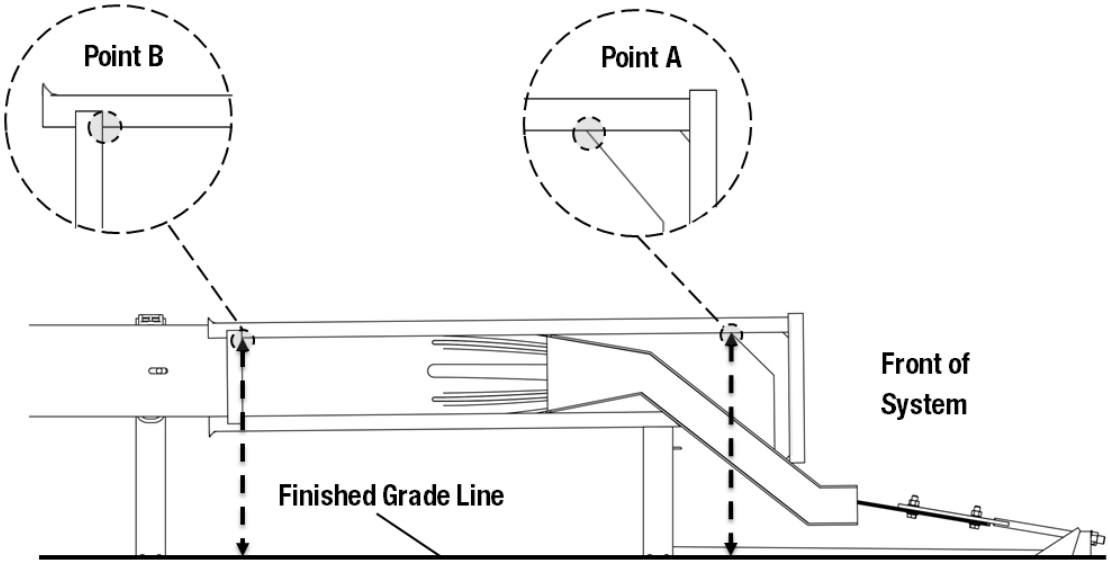

© 2019 Trinity Highway Products, LLC

TEST LEVEL 3
ASSEMBLY STEPS

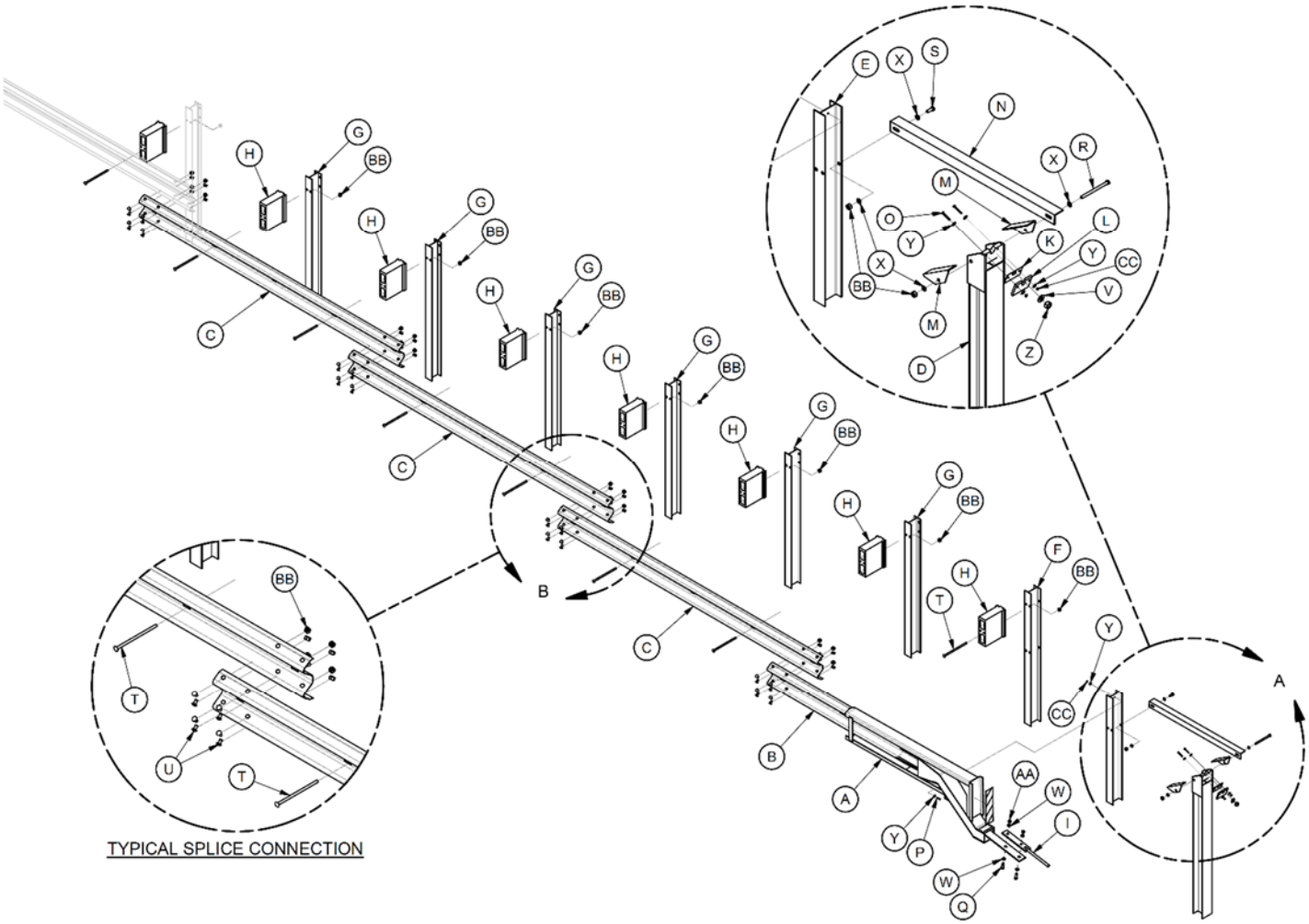

Always use safety precautions when performing assembly, maintenance, repair and/or moving heaving equipment.

Ensure proper personal protective equipment (PPE) is worn.

Ensure safety measures incorporating appropriate traffic control devices conforming with local standards and that of MUTCD are in place before beginning.

Failure to follow these warnings could result in serious injury or death.

NOTE: The order in which the steps appear in this manual are not necessarily the order in which they must be followed. ALL STEPS MUST BE COMPLETED.

© 2019 Trinity Highway Products, LLC

STEP 1 System Line Post Assembly (Posts 3-8)

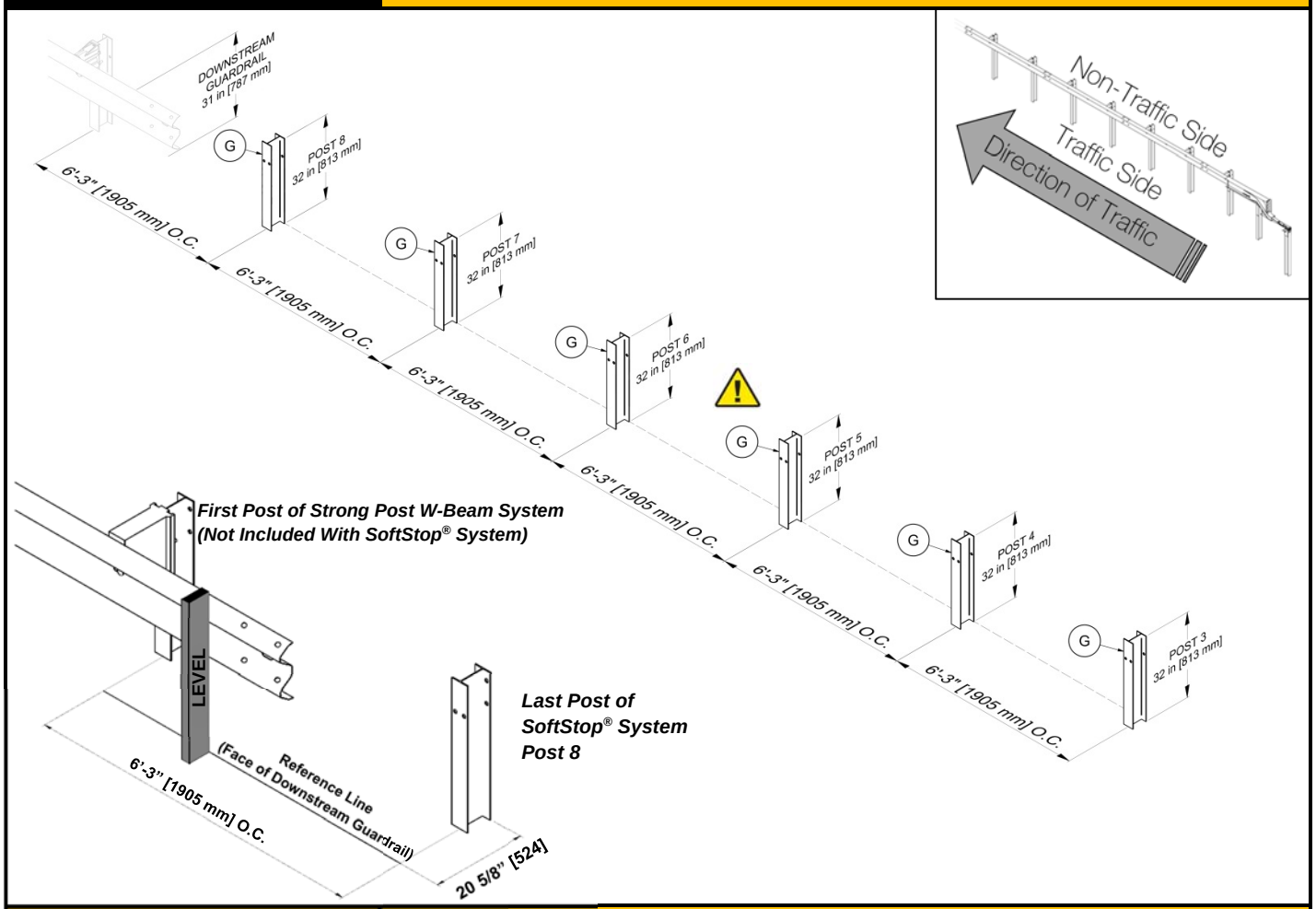

PARTS

G	533G	6 EA

INSTRUCTIONS

1. Assemble all parts in the configuration and orientation as shown in the above diagram.
2. The SoftStop® System must be attached to strong post w-beam guardrail that has been properly transitioned to 31" [787 mm] rail height per state/specifying agency (see Appendix for transition drawing examples).
3. Establish the location of the last post of the SoftStop® System (Post 8) by placing a level or straight edge on the face of downstream guardrail to the finished grade and applying offset and post spacing requirements shown above.
4. Ensure proper post spacing and post height is achieved for Posts 3-8 (Part G) per shown dimensions above.

Use only Trinity Highway parts that are specified herein for the SoftStop® System for assembling, maintaining, or repairing the SoftStop® System. Do not utilize or otherwise commingle parts from other systems even if those systems are Trinity Highway systems.

WARNING

Proper site grading must be accomplished in accordance with local specifying agency guidelines or the AASHTO Roadside Design Guide, whichever is more stringent. Failure to follow this warning could result in serious injury or death in the event of a vehicle impact or collision with the system.

© 2019 Trinity Highway Products, LLC

STEP 2 Post Assembly (Posts 0-2)

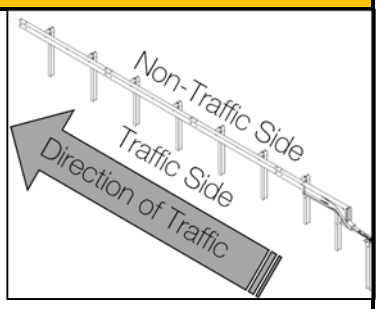

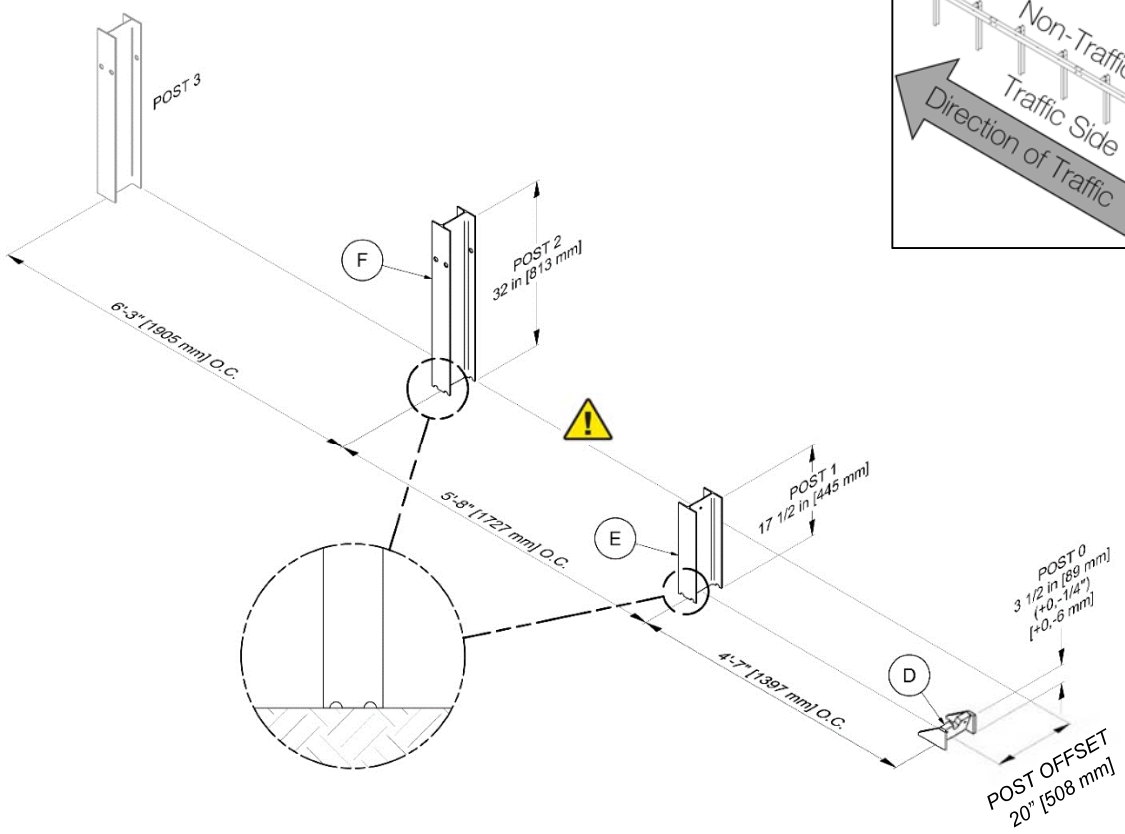

PARTS

F	15000G	1 EA
E	15203G	1 EA
D	15205A	1 EA

INSTRUCTIONS

1. Assemble all parts in the configuration and orientation shown above. Ensure proper offset for Post 0 (Part D) and Post 1 (Part E) is obtained per shown dimension above (offset measured from back of Post 2 (Part F) to center of Post 0 & 1.
2. Ensure center of yielding holes for Post 1 & 2 are approximately at finished grade, as shown.
3. Ensure Post 0 is installed approximately plumb and oriented with the front side of post facing towards upstream end. Ensure stub height does not exceed 3 1/2" [89 mm] above finished grade. See drawing above.
4. Ensure proper post spacing and post height is achieved per shown dimensions above.

Use only Trinity Highway parts that are specified herein for the SoftStop® System for assembling, maintaining, or repairing the SoftStop® System. Do not utilize or otherwise commingle parts from other systems even if those systems are Trinity Highway systems.

WARNING

Proper site grading must be accomplished in accordance with local specifying agency guidelines or the AASHTO Roadside Design Guide, whichever is more stringent. Failure to follow this warning could result in serious injury or death in the event of a vehicle impact or collision with the system.

© 2019 Trinity Highway Products, LLC

STEP 3 — 12” Composite Block Assembly (Posts 3-8)

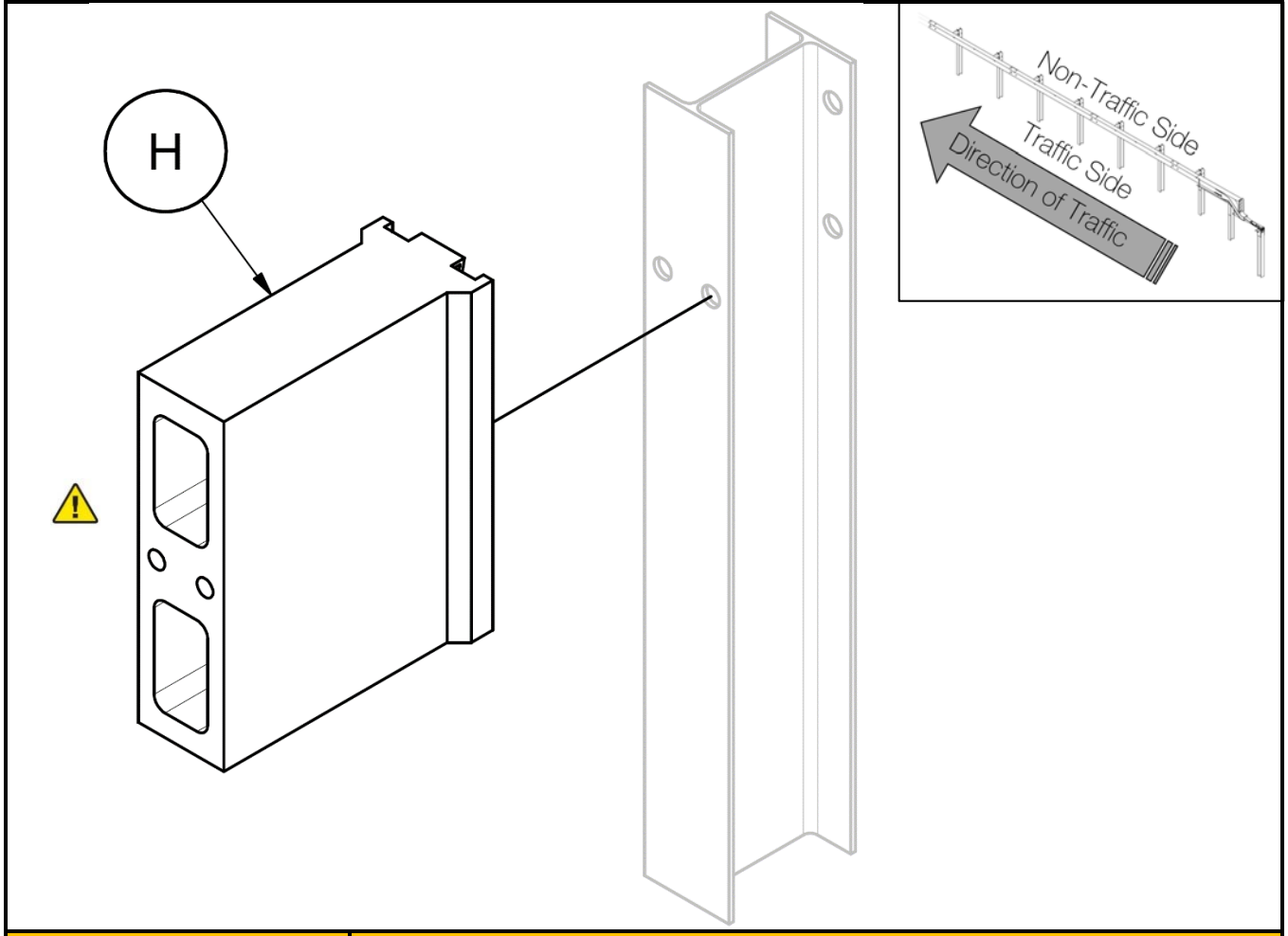

PARTS

H	6740B	6 EA

INSTRUCTIONS

1. Assemble all parts in the configuration and orientation shown above.
2. Attach (1 EA) 12” [305 mm] Composite Offset Block (Part H) on traffic side of Posts 3-8. The 12” [305 mm] Composite Offset Block is typically equipped with a self-hanging mounting tab.

Use only Trinity Highway parts that are specified herein for the SoftStop® System for assembling, maintaining, or repairing the SoftStop® System. Do not utilize or otherwise commingle parts from other systems even if those systems are Trinity Highway systems.

WARNING

Do not use any 12” [305 mm] Composite Offset Blocks (Part H) if they show signs of damage. Seek replacement from Trinity Highway prior to assembly.

© 2019 Trinity Highway Products, LLC

STEP 4 12” Composite Block Assembly (Post 2)

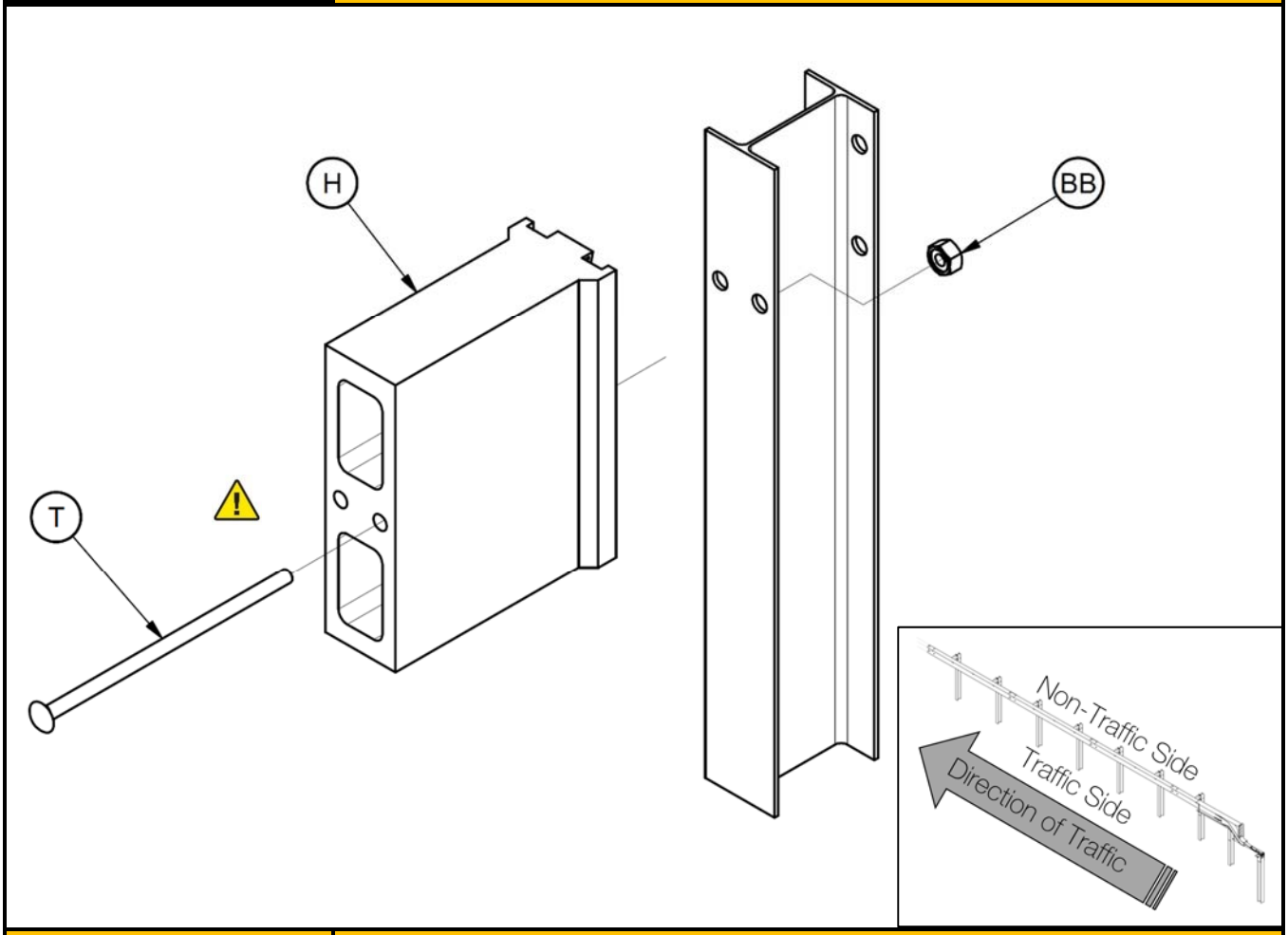

PARTS

H	6740B	1 EA
T	3540G	1 EA
BB	3340G	1 EA

INSTRUCTIONS

1. Assemble all parts in the configuration and orientation shown above.
2. Attach (1 EA) 12” [305 mm] Composite Offset Block (Part H) on traffic side of Post 2. The 12” [305 mm] Composite Offset Block is typically equipped with a self-hanging mounting tab.
3. Secure Offset Block to post with shown hardware, utilizing either block/post bolt hole.
4. Tighten the threaded hardware to a snug position with an appropriately sized wrench or socket.

Use only Trinity Highway parts that are specified herein for the SoftStop® System for assembling, maintaining, or repairing the SoftStop® System. Do not utilize or otherwise commingle parts from other systems even if those systems are Trinity Highway systems.

WARNING

Do not use any 12” [305 mm] Composite Offset Blocks (Part H) if they show signs of damage. Seek replacement from Trinity Highway prior to assembly.

© 2019 Trinity Highway Products, LLC

STEP 5A 12’-6” System Rail Assembly (Post 3-8)

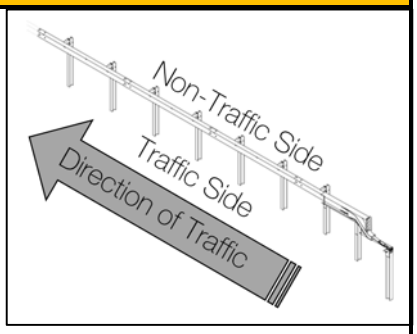

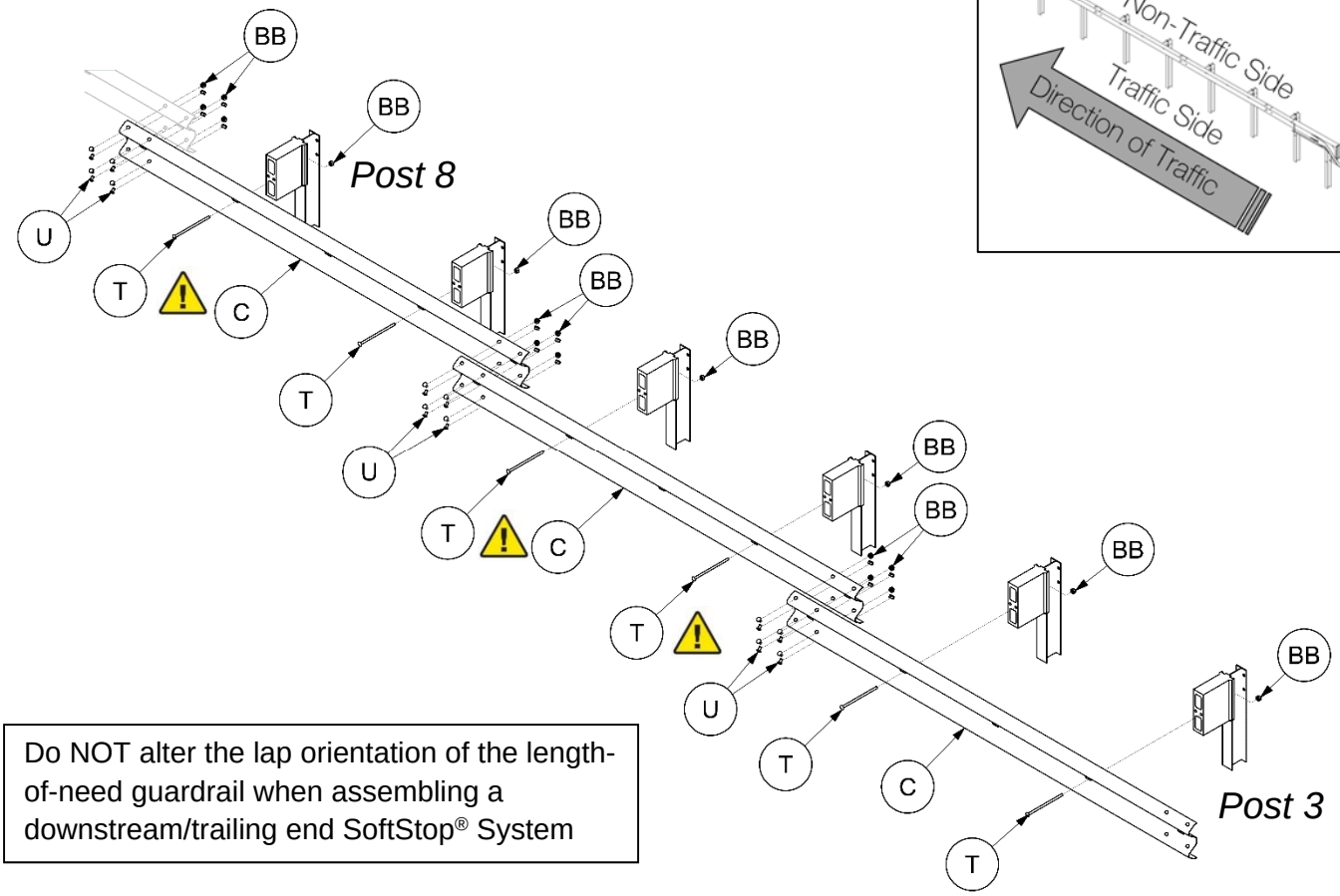

Do NOT alter the lap orientation of the length-of-need guardrail when assembling a downstream/trailing end SoftStop® System

PARTS

C	11G	3 EA
T	3540G	6 EA
U	3360G	24 EA
BB	3340G	30 EA

INSTRUCTIONS

1. Utilizing the block/post bolt hole which best aligns with the slot in the System Rail panels, assemble all parts in the configuration and orientation shown above.
2. Place all System Rail panels (Part C) on the traffic side of the posts and **lap all System Rail panels in the direction of traffic immediately adjacent to the guardrail installation** as shown above, using shown hardware.
3. Tighten all threaded hardware to a snug position with an appropriately sized wrench or socket.

Use only Trinity Highway parts that are specified herein for the SoftStop® System for assembling, maintaining, or repairing the SoftStop® System. Do not utilize or otherwise commingle parts from other systems even if those systems are Trinity Highway systems.

WARNING

Do not place anything between any post bolt head and the SoftStop® System Rail that would prevent the bolt from pulling through (i.e. no rectangular washers or delineators). Failure to follow this warning could result in serious injury or death in the event of a collision.

© 2019 Trinity Highway Products, LLC

STEP 5B 25’-0” System Rail Assembly (Post 5-8)

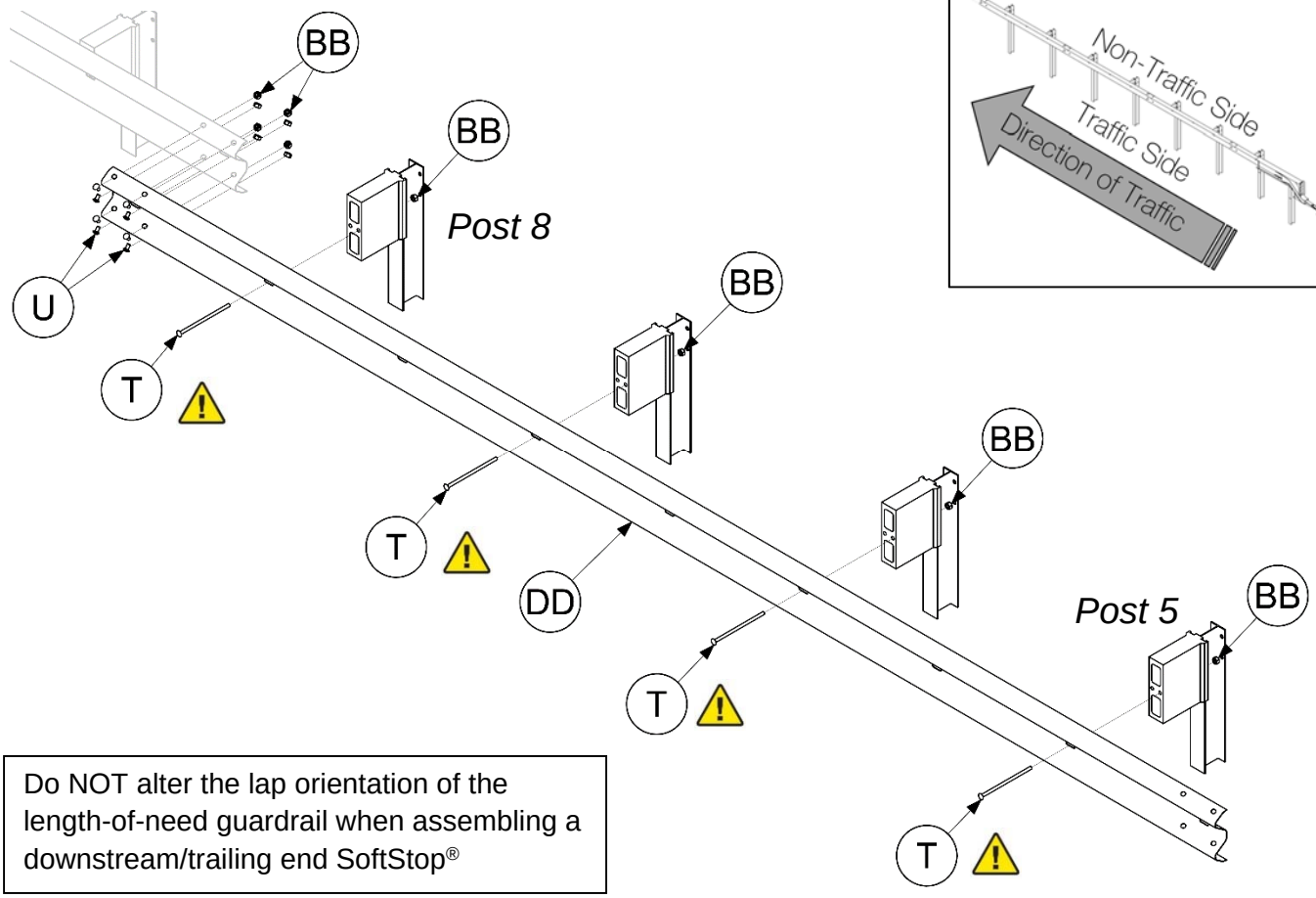

Do NOT alter the lap orientation of the length-of-need guardrail when assembling a downstream/trailing end SoftStop®

PARTS

DD	61G	1 EA
T	3540G	4 EA
U	3360G	8 EA
BB	3340G	12 EA

INSTRUCTIONS

1. Utilizing the block/post bolt hole which best aligns with the slot in the System Rail panel, assemble all parts in the configuration and orientation shown above.
2. Place all System Rail panels (Part DD) on the traffic side of the posts and **lap System Rail panel in the direction of traffic immediately adjacent to the guardrail installation** as shown above, using shown hardware.
3. Tighten all threaded hardware to a snug position with an appropriately sized wrench or socket.

Use only Trinity Highway parts that are specified herein for the SoftStop® System for assembling, maintaining, or repairing the SoftStop® System. Do not utilize or otherwise commingle parts from other systems even if those systems are Trinity Highway systems.

WARNING

Do not place anything between any post bolt head and the SoftStop® System Rail that would prevent the bolt from pulling through (i.e. no rectangular washers or delineators). Failure to follow this warning could result in serious injury or death in the event of a collision.

© 2019 Trinity Highway Products, LLC

STEP 6A 12’-6” Anchor Rail Assembly

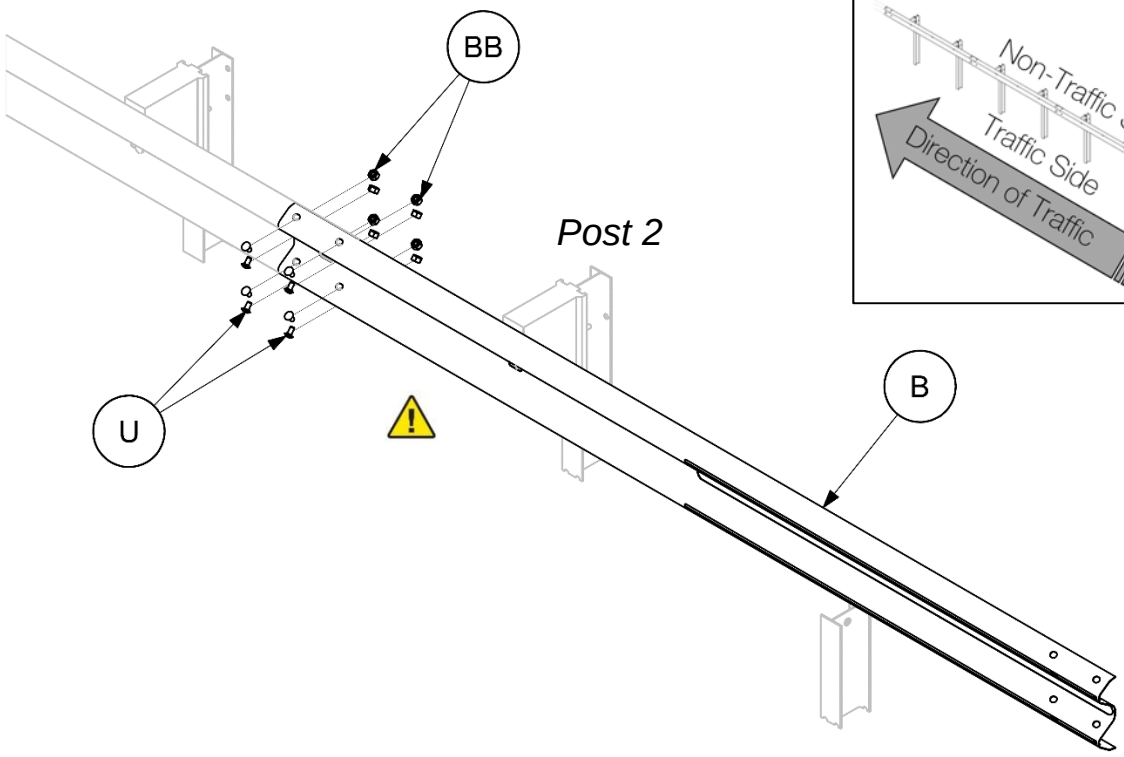

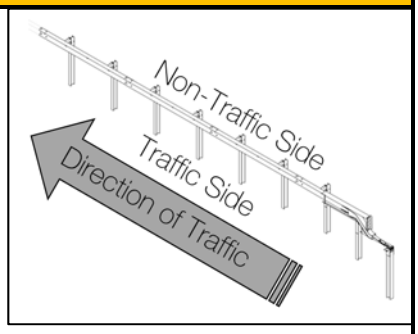

Do NOT alter the lap orientation of the SoftStop® Anchor Rail when assembling a downstream/trailing end SoftStop®

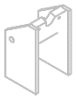

PARTS

B	15200G	1 EA
U	3360G	8 EA
BB	3340G	8 EA

INSTRUCTIONS

1. Assemble all parts in the configuration and orientation shown above. The portion of the SoftStop® Anchor Rail with the three (3) longitudinal slots shall be placed with the slots closest to the SoftStop® Anchor Post (Post 0).
2. Place SoftStop® Anchor Rail (Part B) on the traffic side and **lap in the direction of traffic immediately adjacent to the guardrail installation** as shown above, using shown hardware.
3. Tighten all threaded hardware to a snug position with an appropriately sized wrench or socket.

Use only Trinity Highway parts that are specified herein for the SoftStop® System for assembling, maintaining, or repairing the SoftStop® System. Do not utilize or otherwise commingle parts from other systems even if those systems are Trinity Highway systems.

WARNING

Do not bolt the SoftStop® Anchor Rail to Post 2. Failure to follow this warning could result in serious injury or death in the event of a collision.

© 2019 Trinity Highway Products, LLC

STEP 6B 25’-0” Anchor Rail Assembly

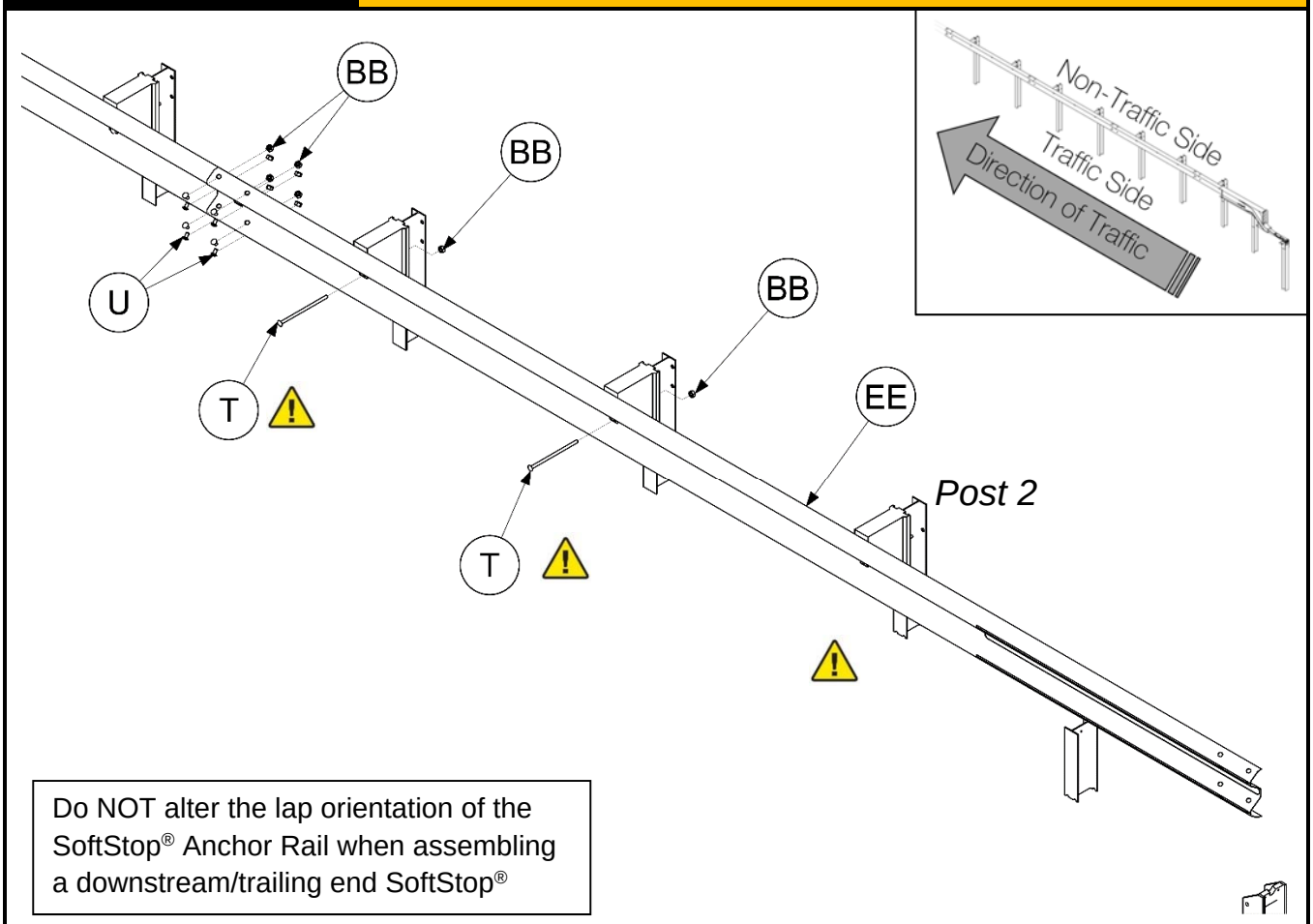

Do NOT alter the lap orientation of the SoftStop® Anchor Rail when assembling a downstream/trailing end SoftStop®

PARTS

T	3540G	2
U	3360G	8
BB	3340G	10
EE	15215G	1

Use only Trinity Highway parts that are specified herein for the SoftStop® System for assembling, maintaining, or repairing the SoftStop® System. Do not utilize or otherwise commingle parts from other systems even if those systems are Trinity Highway systems.

INSTRUCTIONS

1. Utilizing the block/post bolt hole which best aligns with the slot in the SoftStop® Anchor Rail, assemble all parts in the configuration and orientation shown above.
2. The portion of the SoftStop® Anchor Rail with the three (3) longitudinal slots shall be placed with the slots closest to the SoftStop® Anchor Post (Post 0).
3. Place SoftStop® Anchor Rail (Part EE) on the traffic side and **lap in the direction of traffic immediately adjacent to the guardrail installation** as shown above, using shown hardware.
4. Tighten all threaded hardware to a snug position with an appropriately sized wrench or socket.

WARNING

Do not bolt the SoftStop® Anchor Rail to Post 2. Do not place anything between any post bolt head and the SoftStop® System Rail that would prevent the bolt from pulling through. Failure to follow this warning could result in serious injury or death in the event of a collision.

© 2019 Trinity Highway Products, LLC

STEP 7 Anchor Rail Shipping Tabs Removal

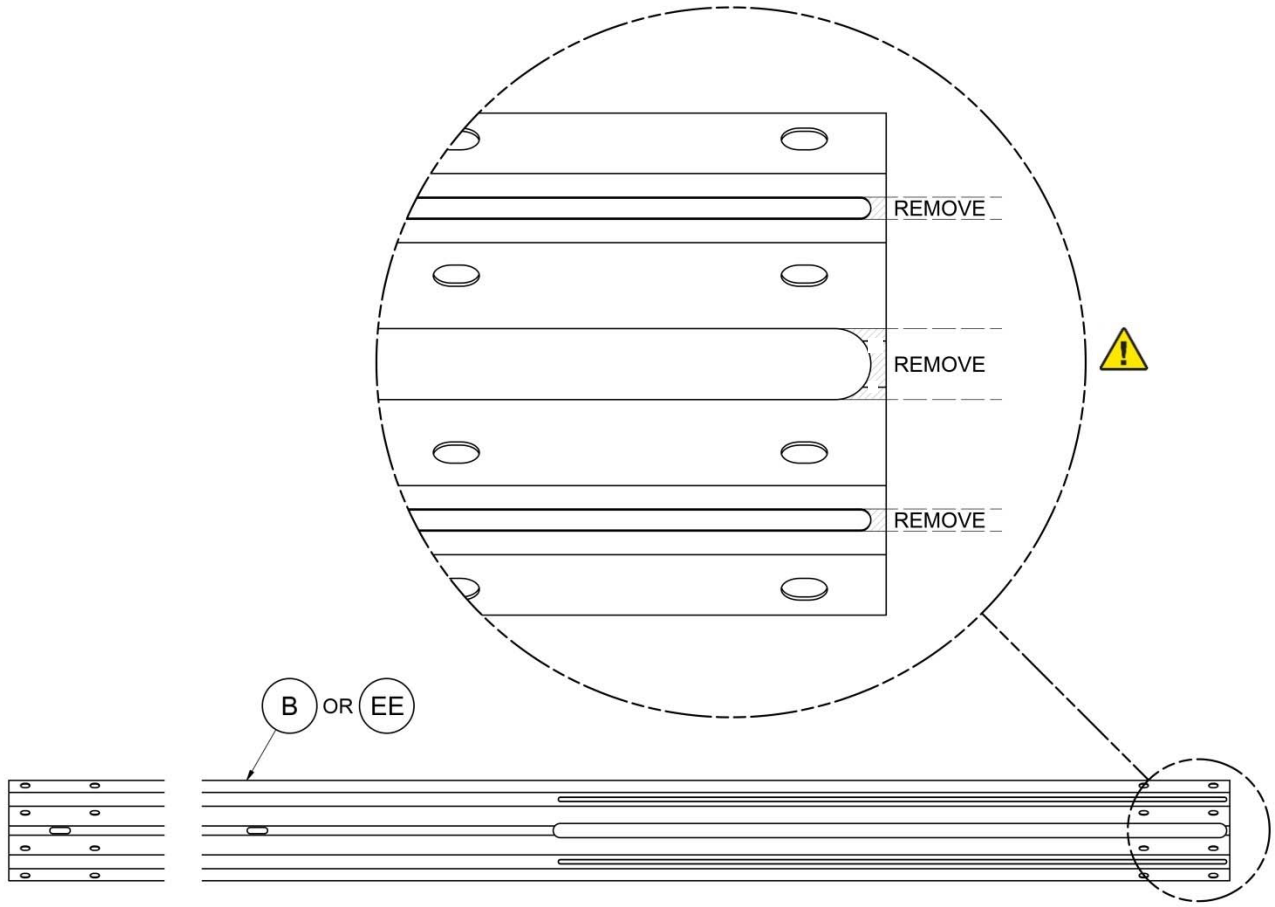

PARTS

B	15200G	1 EA
EE	15215G	1 EA

INSTRUCTIONS

The SoftStop® Anchor Rail is available in two lengths:
12'-6" (Part B) or 25'-0" (Part EE). Only one (1) is used per assembly.

1. The SoftStop® Anchor Rail is manufactured with three (3) shipping tabs. These shipping tabs can be removed with an abrasive blade cutting device to assist in the assembly process.
2. Cut the three (3) shipping tabs with six (6) straight cuts

Step 7 Assembly Tip: For efficiency, make the bottom cut first, moving up the SoftStop® Anchor Rail to the top cut.

Note: It is NOT required to remove the shipping tabs. It is permissible to assemble the SoftStop® Anchor Rail with flattened tabs, should the contractor desire to do so.

Use only Trinity Highway parts that are specified herein for the SoftStop® System for assembling, maintaining, or repairing the SoftStop® System. Do not utilize or otherwise commingle parts from other systems even if those systems are Trinity Highway systems.

WARNING

Keep body parts clear of abrasive blade cutting device. Ensure proper personal protective equipment (PPE) is worn. Failure to follow this warning could result in serious injury or death.

© 2019 Trinity Highway Products, LLC

STEP 8 Anchor Rail Hardware Assembly

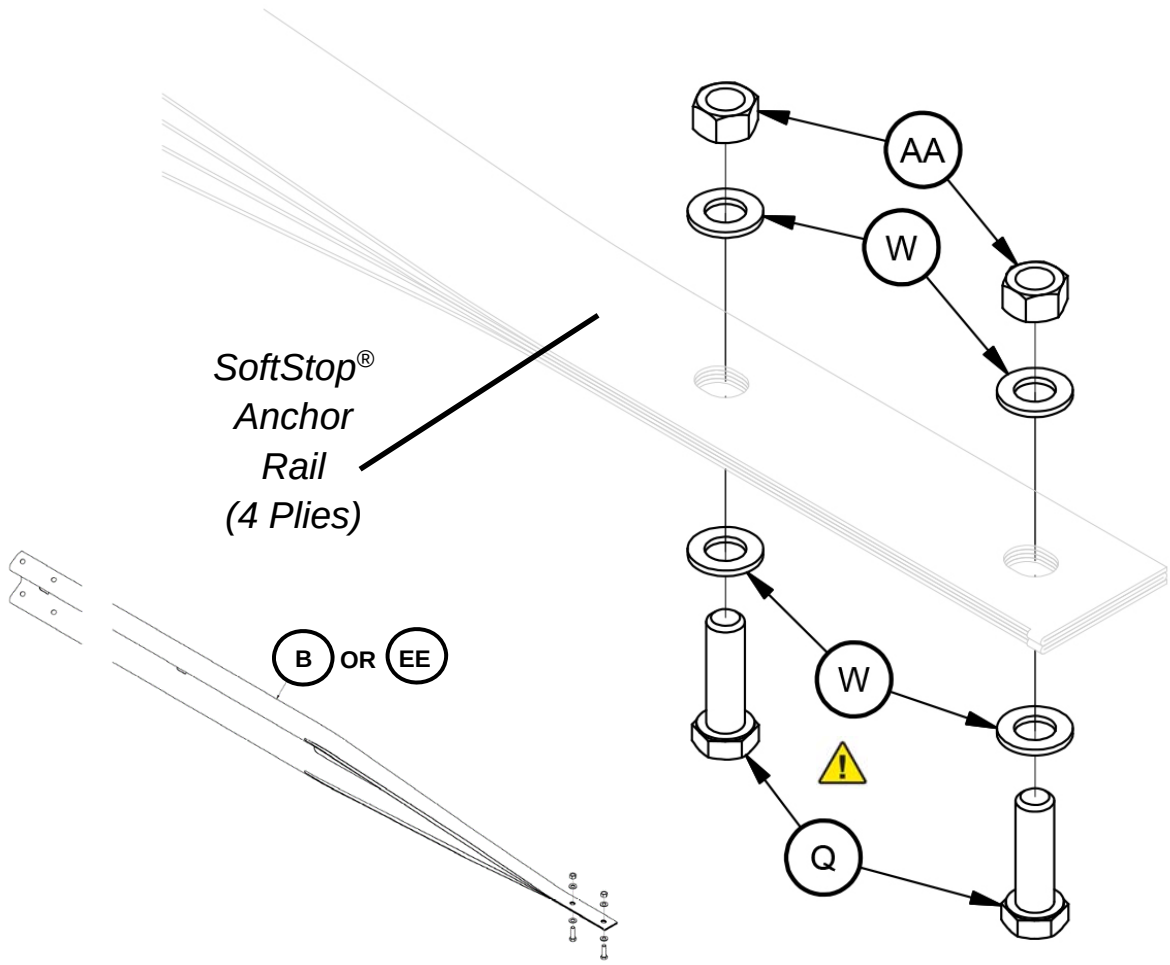

PARTS

B	15200G	1 EA
Q	3717G	2 EA
W	3701G	4 EA
AA	3704G	2 EA
EE	15215G	1 EA

INSTRUCTIONS

1. Assemble all parts in the configuration and orientation shown above.
2. Insert both hex bolts (Part Q) through the bottom side of the four (4) plies of the SoftStop® Anchor Rail (Part B or Part EE). The bottom side is determined by the final assembled position on the SoftStop® System. The use of locking pliers or c-clamps may aid the assembly process.
3. It is recommended the hardware be tightened fully to allow the rail to be flattened completely by the hardware; the nuts and washers will be removed and reinstalled in Step 10.

Note: Only one (1) SoftStop® Anchor Rail is used per assembly, 12'-6" (Part B) or 25'-0" (Part EE).

Use only Trinity Highway parts that are specified herein for the SoftStop® System for assembling, maintaining, or repairing the SoftStop® System. Do not utilize or otherwise commingle parts from other systems even if those systems are Trinity Highway systems.

WARNING

Insert the SoftStop® Anchor Paddle Bolts (Part Q) from the bottom of the SoftStop® Anchor Rail. Failure to follow this warning could result in serious injury or death in the event of a collision.

© 2019 Trinity Highway Products, LLC

STEP 9A Impact Head Assembly (12'-6" Anchor Rail)

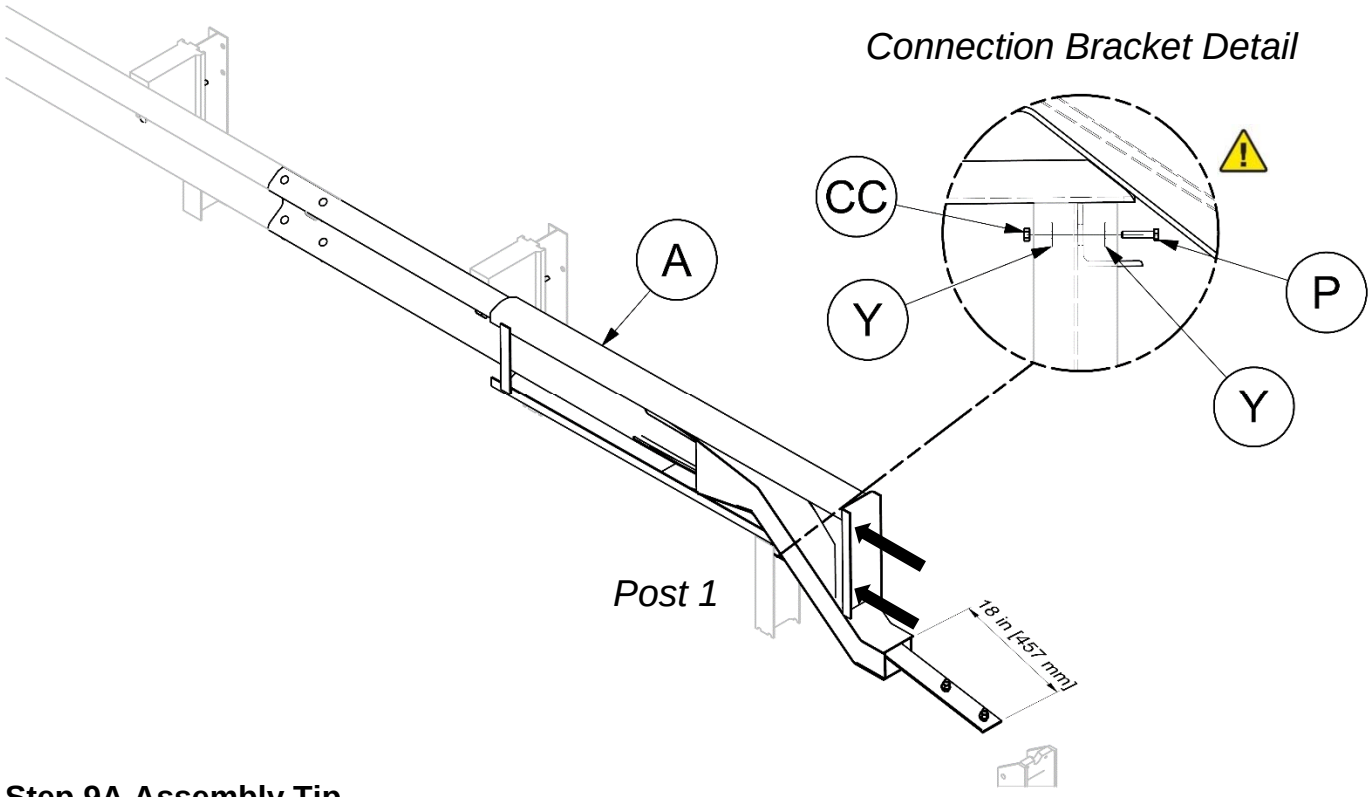

Step 9A Assembly Tip

See Step 12, 2nd Instruction regarding strut installation:

Some contractors have found it to be more efficient to make the required shallow valley/trough for the strut just before installing the head in Step 9A, while it is more accessible.

PARTS		
A	15208A	1 EA
P	105286G	1 EA
Y	3240G	2 EA
CC	3245G	1 EA

INSTRUCTIONS

1. Assemble all parts in the configuration and orientation shown above.
2. Mechanically push the SoftStop® Impact Head (Part A) on to the flattened and bolted SoftStop® Anchor Rail (Step 8) until its Connection Bracket rests against Post 1 and approximately 18" [457 mm] of the SoftStop® Anchor Rail is protruding out the Chute.
3. Fasten Post 1 and the Connection Bracket together with shown hardware (Parts P, Y, & CC). See Connection Bracket detail.
4. Tighten the threaded hardware to a snug position with an appropriately sized wrench or socket and ensure a minimum of two bolt threads are protruding beyond the nut.

Use only Trinity Highway parts that are specified herein for the SoftStop® System for assembling, maintaining, or repairing the SoftStop® System. Do not utilize or otherwise commingle parts from other systems even if those systems are Trinity Highway systems.

WARNING

The SoftStop® Impact Head Connection Bracket must rest against the front side of Post #1 (between Posts 0-1) as shown in the Connection Bracket Detail above.

© 2019 Trinity Highway Products, LLC

STEP 9B Impact Head Assembly (25'-0" Anchor Rail)

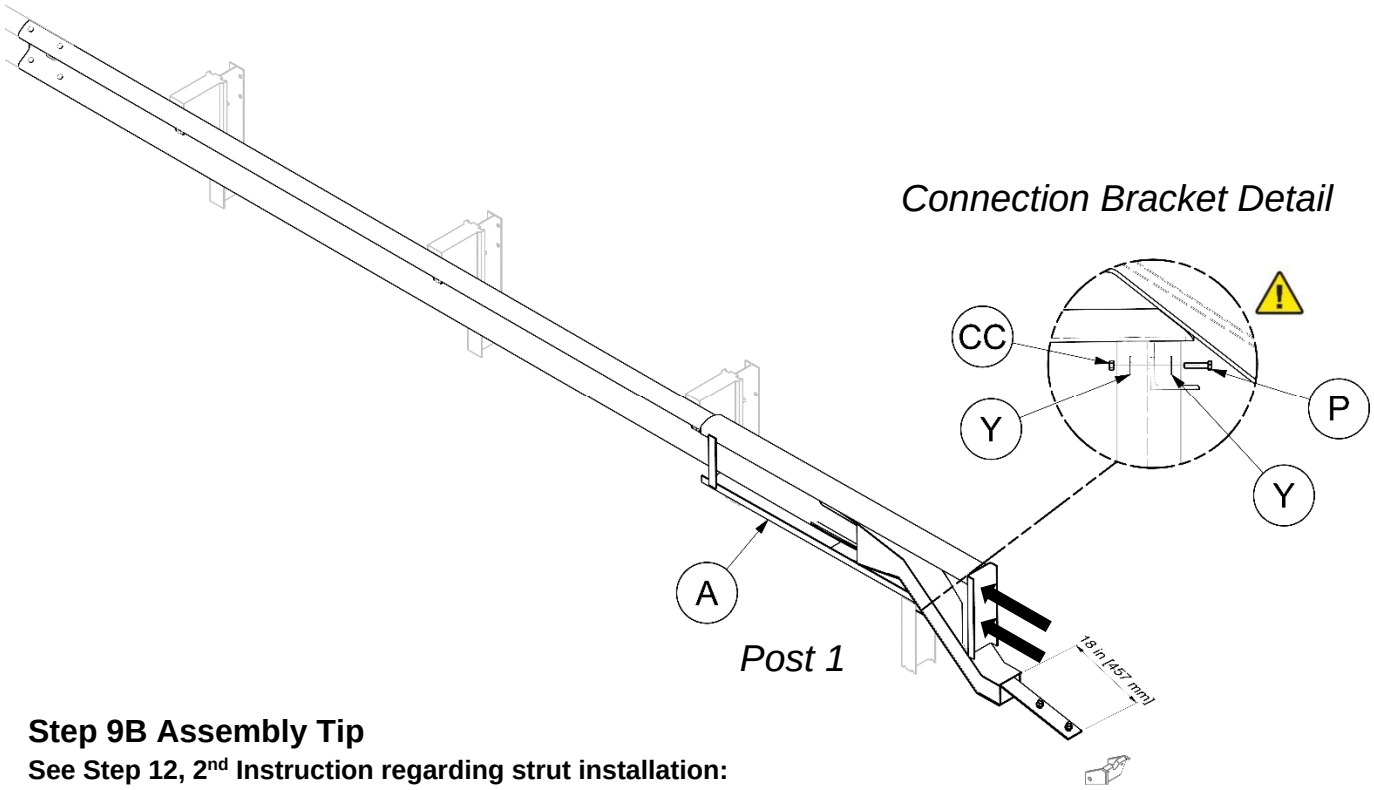

Step 9B Assembly Tip

See Step 12, 2nd Instruction regarding strut installation:

Some contractors have found it to be more efficient to make the required shallow valley/trough for the strut just before installing the head in Step 9B, while it is more accessible.

PARTS

A	15208A	1 EA
P	105286G	1 EA
Y	3240G	2 EA
CC	3245G	1 EA

INSTRUCTIONS

1. Assemble all parts in the configuration and orientation shown above.
2. Mechanically push the SoftStop® Impact Head (Part A) on to the flattened and bolted SoftStop® Anchor Rail (Step 8) until its Connection Bracket rests against Post 1 and approximately 18" [457 mm] of the SoftStop® Anchor Rail is protruding out the Chute.
3. Fasten Post 1 and the Connection Bracket together with shown hardware (Parts P, Y, & CC). See Connection Bracket detail.
4. Tighten the threaded hardware to a snug position with an appropriately sized wrench or socket and ensure a minimum of two bolt threads are protruding beyond the nut.

Use only Trinity Highway parts that are specified herein for the SoftStop® System for assembling, maintaining, or repairing the SoftStop® System. Do not utilize or otherwise commingle parts from other systems even if those systems are Trinity Highway systems.

WARNING

The SoftStop® Impact Head Connection Bracket must rest against the front side of Post #1 (between Posts 0-1) as shown in the Connection Bracket Detail above.

© 2019 Trinity Highway Products, LLC

STEP 10 Anchor Paddle Assembly

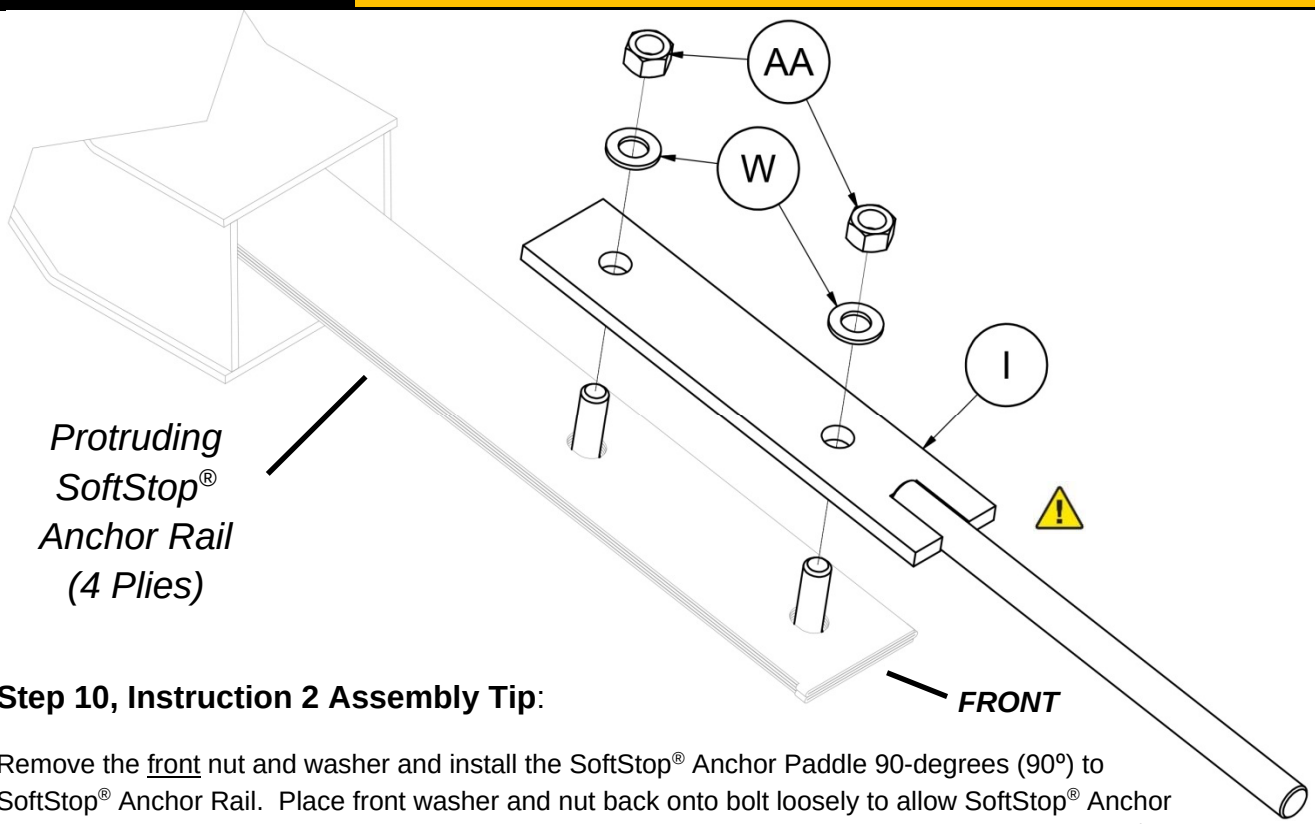

Step 10, Instruction 2 Assembly Tip:

Remove the front nut and washer and install the SoftStop® Anchor Paddle 90-degrees (90º) to SoftStop® Anchor Rail. Place front washer and nut back onto bolt loosely to allow SoftStop® Anchor Paddle rotation. Remove the rear nut and washer and drop the bolt slightly to allow the SoftStop® Anchor Paddle to rotate into the proper position, aligned with the four (4) plies of the SoftStop® Anchor Rail. Reassemble the front and rear bolt, washer and nut in the orientation shown above. Proceed to Step 3 and tighten as specified.

PARTS

I	15204A	1 EA
W	3701G	2 EA
AA	3704G	2 EA

INSTRUCTIONS

1. Assemble all parts in the configuration and orientation shown above.
2. Remove the nuts (Part AA) and top washers (Part W) and place the SoftStop® Anchor Paddle (Part I) onto the hex bolts. The SoftStop® Anchor Paddle is assembled on the top side of the four (4) plies of the protruding SoftStop® Anchor Rail. Reassemble the top washers and nuts onto the hex bolt as shown above. The use of locking pliers or c-clamps will aid the assembly process.
3. Tighten all threaded hardware to a snug position with an appropriately sized wrench or socket and ensure a minimum of two bolt threads are protruding beyond the nut.

Use only Trinity Highway parts that are specified herein for the SoftStop® System for assembling, maintaining, or repairing the SoftStop® System. Do not utilize or otherwise commingle parts from other systems even if those systems are Trinity Highway systems.

WARNING

The SoftStop® Anchor Paddle (Part I) must be placed on the topside of the SoftStop® Anchor Rail. Failure to follow this warning could result in serious injury or death in the event of a collision.

© 2019 Trinity Highway Products, LLC

STEP 11 Anchor Post Assembly (Post 0)

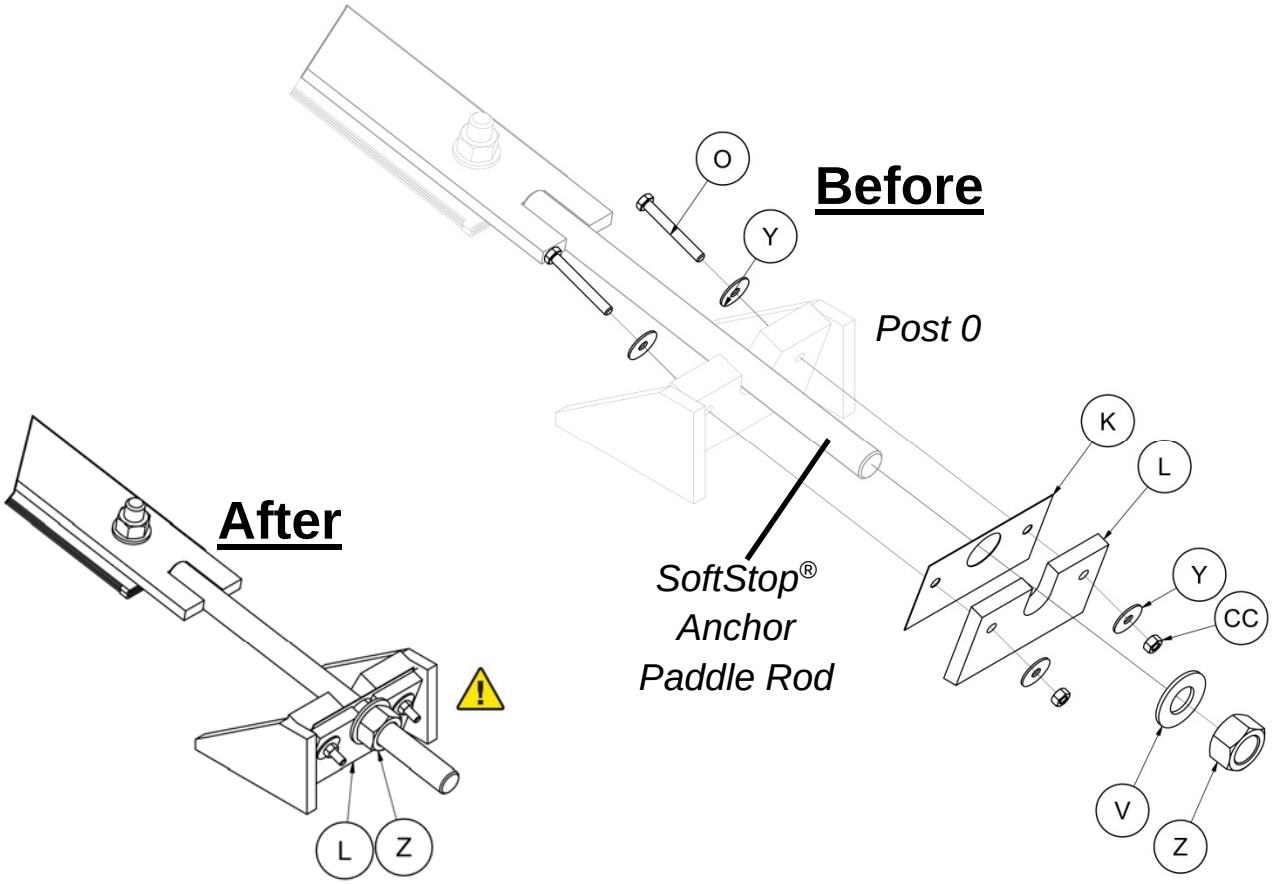

PARTS

Y	3240G	4 EA
CC	3245G	2 EA
Z	3908G	1 EA
V	4902G	1 EA
L	15206G	1 EA
K	15207G	1 EA
O	105285G	2 EA

Use only Trinity Highway parts that are specified herein for the SoftStop® System for assembling, maintaining, or repairing the SoftStop® System. Do not utilize or otherwise commingle parts from other systems even if those systems are Trinity Highway systems.

INSTRUCTIONS

1. Assemble all parts in the configuration and orientation shown above.
2. Place the rod portion of the SoftStop® Anchor Paddle in the notch of Post 0.
3. Place the SoftStop® Keeper Plate (Part K) and SoftStop® Plate Washer (Part L) onto the SoftStop® Anchor Paddle Rod and fasten to Post 0 using shown hardware (Part O, Y, CC).
4. Place washer (Part V) then nut (Part Z) on the SoftStop® Anchor Paddle Rod.
5. Tighten all threaded hardware to a snug position with an appropriately sized wrench or socket and ensure a minimum of two bolt threads are protruding beyond the nut.

WARNING

Ensure the 1” Hex Nut (Part Z) has been fully tightened against the SoftStop® Plate Washer (Part L). Failure to follow this warning could result in serious injury or death in the event of a collision.

© 2019 Trinity Highway Products, LLC

STEP 12 Angle Strut Assembly (Posts 0-1)

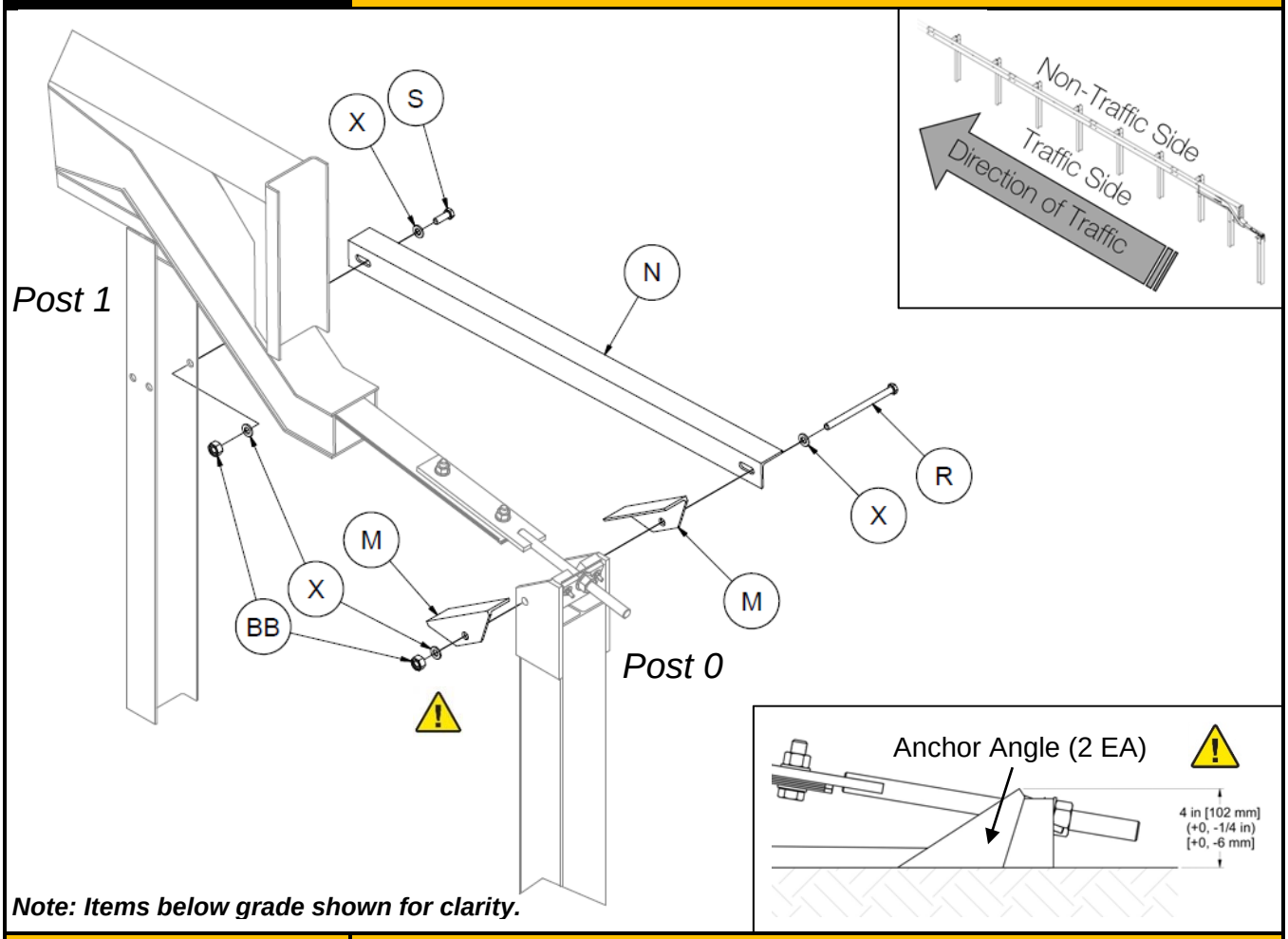

Note: Items below grade shown for clarity.

PARTS

BB	3340G	2 EA
X	4372G	4 EA
R	4489G	1 EA
M	15201G	2 EA
N	15202G	1 EA
S	3391G	1 EA

INSTRUCTIONS

1. Assemble all parts in the configuration and orientation shown above.
2. **A shallow valley/trough between Post 0 & 1 for the SoftStop® Angle Strut (Part N) and SoftStop® Anchor Angles (Part M), will be necessary, as a portion will be below the finished grade.**
3. Position the SoftStop® Anchor Angles (Part M) onto Post 0 and place SoftStop® Angle Strut (Part N) on the non-traffic side with the "toe" of the vertical leg down and fasten to Post 0 & 1 using shown hardware (Part R, S, X, BB).
4. Attach the SoftStop® Angle Strut (Part N) at Post 1, utilizing the SYTP hole that best aligns.
5. Tighten all threaded hardware to a snug position with an appropriately sized wrench or socket and ensure a minimum of two bolt threads are protruding beyond the nut.

Use only Trinity Highway parts that are specified herein for the SoftStop® System for assembling, maintaining, or repairing the SoftStop® System. Do not utilize or otherwise commingle parts from other systems even if those systems are Trinity Highway systems.

WARNING

Ensure fully assembled SoftStop® Anchor Post height (with SoftStop® Anchor Angles) does not exceed 4" [102 mm] above finished grade line.

© 2019 Trinity Highway Products, LLC

STEP 13 Delineation Assembly

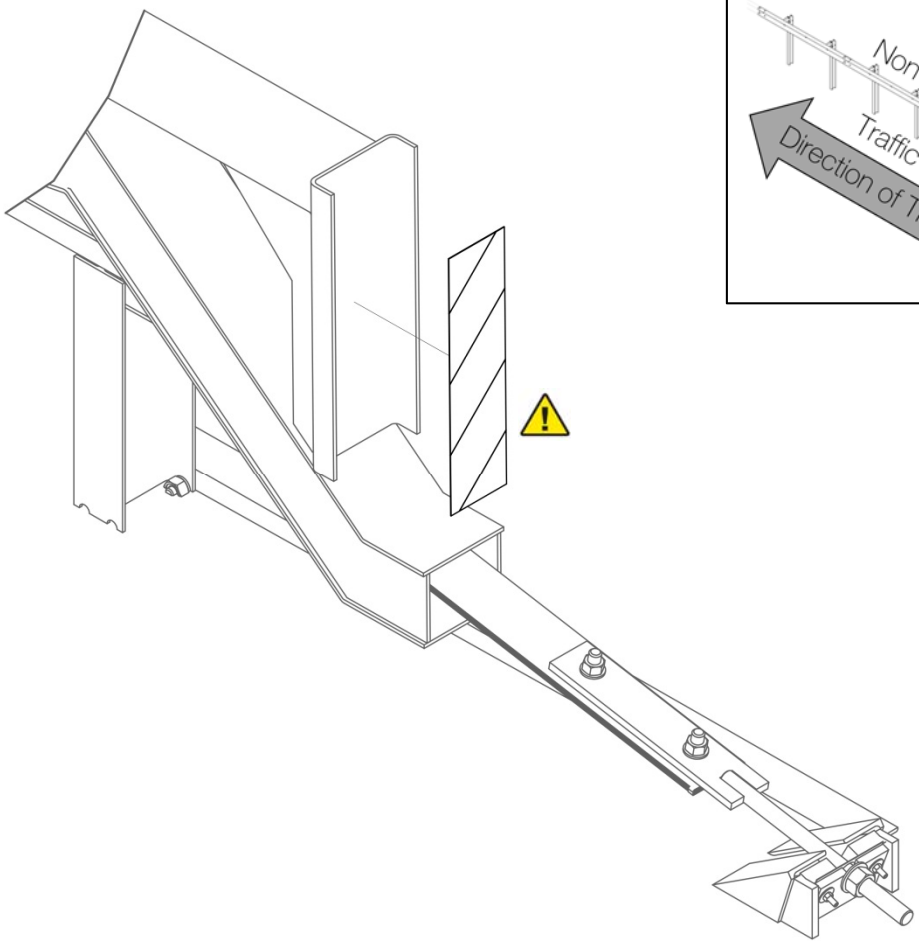

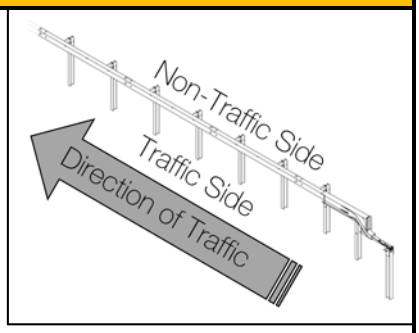

PARTS

	By Others	
*	5851B	1
**	5852B	1

Use only Trinity Highway parts that are specified herein for the SoftStop® System for assembling, maintaining, or repairing the SoftStop® System. Do not utilize or otherwise commingle parts from other systems even if those systems are Trinity Highway systems.

INSTRUCTIONS

1. Assemble all parts in the configuration and orientation shown above.

Note: Manufacturer suggests that user provide delineation (reflective sheeting) as required by the state/specifying agency for the terminal.

Trinity Highway offers two (2) specific reflective sheeting options [for LEFT (*****5851B*****) and RIGHT (******5852B******) assembly applications], at an additional charge. Trinity Highway makes no guarantees they meet the minimum specifications, comply with MUTCD requirements or comply with state/specifying agency requirements.

WARNING

Ensure delineation (reflective sheeting) used on SoftStop® System meets state/specifying agency's MUTCD for proper delineation.
Use of steel delineator posts must be a minimum of 6" in front of the SoftStop® System, Post #0.

© 2019 Trinity Highway Products, LLC

Assembly Inspection Checklist (File With Project Folder)

Performed by: _____

Date: _____

Location: _____

- ☐ Ensure required traffic control is in place to conduct SoftStop® System assembly. (p. 5)
- ☐ Ensure only Trinity Highway SoftStop® System parts are used for the assembly of the SoftStop® System and that all parts are free of damage. (p. 5)
- ☐ Ensure proper site grading complies with state/specifying agency guidelines or AASHTO Roadside Design Guide, whichever is more stringent. (p. 14)
- ☐ Ensure that soil around all posts is properly compacted and posts are free to rotate. When leave-outs are necessary, use only state/specifying agency approved backfill material within the leave-out area. (p. 19)
- ☐ Ensure SoftStop® System offset does not exceed max allowed by test level and radii. (pp. 16-17)
- ☐ Ensure no rail panels, between Post 0 and last post within the SoftStop® System are curved. (p. 16)
- ☐ Ensure the center of the SYTP® yielding holes are approximately centered at finished grade line for Post 1 & 2. (p. 25)
- ☐ Ensure the fully assembled SoftStop® Anchor Post (Post 0) has a maximum height of 4" [102 mm] and a minimum height of 3 3/4" [96 mm] above finished grade line. (p. 21)
- ☐ Ensure that the SoftStop® Anchor Rail is <u>not</u> bolted to Post 2 (SYTP®). (pp. 30-31)
- ☐ Ensure 12" [305 mm] composite offset blocks are properly in place and not damaged or rotated. (pp. 26-27)
- ☐ Ensure that the SoftStop® System Rail height is approximately 31" [787 mm] above the finished grade. (p. 6)
- ☐ Ensure rails are lapped in the direction of traffic immediately adjacent to the installation. (pp. 28-31)
- ☐ Ensure the SoftStop® Impact Head Connection Bracket is attached to the front side of SoftStop® Post 1 (SYTP®) with required 5/16" hardware. (p. 34)
- ☐ Ensure SoftStop® Impact Head has no more than 3 1/2" [89mm] of upward tilt. (p. 22)
- ☐ Ensure the SoftStop® Anchor Paddle is installed on top of the SoftStop® Anchor Rail and the two (2) 3/4" bolts utilized are installed from the bottom of the SoftStop® Anchor Rail. (pp. 33 & 36)
- ☐ Ensure that the SoftStop® Keeper Plate and Plate Washer are properly positioned with required hardware. (p. 37)
- ☐ Ensure the 1" Hex Nut has been fully tightened against the SoftStop® Plate Washer. (p. 37)
- ☐ Ensure that both SoftStop® Anchor Angles are properly positioned. (p. 38)
- ☐ Ensure the SoftStop® Angle Strut is properly attached on the non-traffic side with the "toe" of the vertical leg down. (p. 38)
- ☐ Ensure that <u>all</u> fasteners of the SoftStop® System are tightened to a snug position with a minimum of two threads protruding beyond the nut.
- ☐ Ensure delineation is placed on SoftStop® Impact Head Strike Plate per MUTCD and/or state/specifying agency. (p. 39)
- ☐ Ensure any steel delineator posts are a minimum of 6" in front of Post #0. (p. 39)

© 2019 Trinity Highway Products, LLC

Repair Inspection Checklist (File With Maintenance Records)

Performed by: _____

Date: _____

Location: _____

- ☐ Ensure required traffic control is in place to conduct SoftStop® System repair. (p. 5)
- ☐ Ensure only Trinity Highway SoftStop® System parts are used for the repair of the SoftStop® System and that all parts are free of damage. (p. 5)
- ☐ Ensure proper site grading complies with state/specifying agency guidelines or AASHTO Roadside Design Guide, whichever is more stringent. (p. 14)
- ☐ Ensure that soil around all posts is properly compacted and posts are free to rotate. When leave-outs are necessary, use only state/specifying agency approved backfill material within the leave-out area. (p. 19)
- ☐ Ensure SoftStop® System offset does not exceed max allowed by test level and radii. (pp. 16-17)
- ☐ Ensure no rail panels, between Post 0 and last post within the SoftStop® System are curved. (p. 16)
- ☐ Ensure the center of the SYTP® yielding holes are approximately centered at finished grade line for Post 1 & 2. (p. 25)
- ☐ Ensure the fully assembled SoftStop® Anchor Post (Post 0) has a maximum height of 4" [102 mm] and a minimum height of 3 3/4" [96 mm] above finished grade line. (p. 21)
- ☐ Ensure that the SoftStop® Anchor Rail is <u>not</u> bolted to Post 2 (SYTP®). (pp. 30-31)
- ☐ Ensure 12" [305 mm] composite offset blocks are properly in place and not damaged or rotated. (pp. 26-27)
- ☐ Ensure that the SoftStop® System Rail height is approximately 31" [787 mm] above the finished grade. (p. 6)
- ☐ Ensure rails are lapped in the direction of traffic immediately adjacent to the installation. (pp. 28-31)
- ☐ Ensure the SoftStop® Impact Head Connection Bracket is attached to the front side of SoftStop® Post 1 (SYTP®) with required 5/16" hardware. (p. 34)
- ☐ Ensure SoftStop® Impact Head has no more than 3 1/2" [89mm] of upward tilt. (p. 22)
- ☐ Ensure the SoftStop® Anchor Paddle is installed on top of the SoftStop® Anchor Rail and the two (2) 3/4" bolts utilized are installed from the bottom of the SoftStop® Anchor Rail. (pp. 33 & 36)
- ☐ Ensure that the SoftStop® Keeper Plate and Plate Washer are properly positioned with required hardware. (p. 37)
- ☐ Ensure the 1" Hex Nut has been fully tightened against the SoftStop® Plate Washer. (p. 37)
- ☐ Ensure that both SoftStop® Anchor Angles are properly positioned. (p. 38)
- ☐ Ensure the SoftStop® Angle Strut is properly attached on the non-traffic side with the "toe" of the vertical leg down. (p. 38)
- ☐ Ensure that <u>all</u> fasteners of the SoftStop® System are tightened to a snug position with a minimum of two threads protruding beyond the nut.
- ☐ Ensure delineation is placed on SoftStop® Impact Head Strike Plate per MUTCD and/or state/specifying agency. (p. 39)
- ☐ Ensure any steel delineator posts are a minimum of 6" in front of Post #0. (p. 39)

© 2019 Trinity Highway Products, LLC

Routine Inspection Checklist (File With Maintenance Records)

Performed by: _____

Date: _____

Location: _____

Trinity Highway recommends the appropriate highway authority develop and administer their own end terminal inspection program, based on location of unit, volume of traffic and impact history.

Important: The SoftStop® System and all of its components shall be inspected for damage after every impact. Repair using only Trinity Highway parts that are specified for use within the SoftStop® System.

IF no end terminal inspection program exists, Trinity Highway recommends visual drive-by inspections at least once every month and walk-up inspections every six (6) months. These inspections shall, at a minimum, consist of:

Visual Drive-By Inspections (Recommended Frequency: Monthly)

- ☐ Check for damage caused by vehicle impacts.
- ☐ Check for damage caused by impacts from snowplow, mowing or roadway operations.
- ☐ Check for misalignment.
- ☐ Check for missing system components.
- ☐ Check for vandalism.
- ☐ Check for damage caused by adverse weather conditions (i.e. erosion, weight of snow, UV).

Walk-Up Inspections (Recommended Frequency: Every Six (6) Months)

Walk-Up Inspections shall include ALL Visual Drive-By Inspection items (listed above) as well as the items listed below.

- ☐ Ensure required traffic control is in place to conduct walk-up inspection.
- ☐ Clear and dispose of any debris or trash found on the SoftStop® site, which may interfere with the performance of the SoftStop® System.
- ☐ Check that fasteners are fully tight and a minimum of two (2) bolt threads are protruding beyond the nut.
- ☐ Check for erosion to the site grading around the system.
- ☐ Ensure the height of the system is being maintained at 31” from finished grade.

If any of the above items are identified during the inspection process, swift action shall be taken to correct and return the SoftStop® System to proper condition outlined in the SoftStop® System assembly manual, latest edition.

© 2019 Trinity Highway Products, LLC

Appendix

Offsite Anchor Rail Pre-Assembly Method

Step A: The SoftStop® Anchor Rail is manufactured with three (3) shipping tabs. These shipping tabs can be removed with an abrasive blade cutting device to assist in the assembly process. The SoftStop® Anchor Rail is available in two lengths: 12'-6" (Part B) or 25'-0" (Part EE).

Note: It is NOT required to remove the shipping tabs. It is permissible to assemble the SoftStop® Anchor Rail with flattened tabs, should the contractor desire to do so.

Assembly Tip: For efficiency, make the bottom cut first, moving up the SoftStop® Anchor Rail to the top cut.

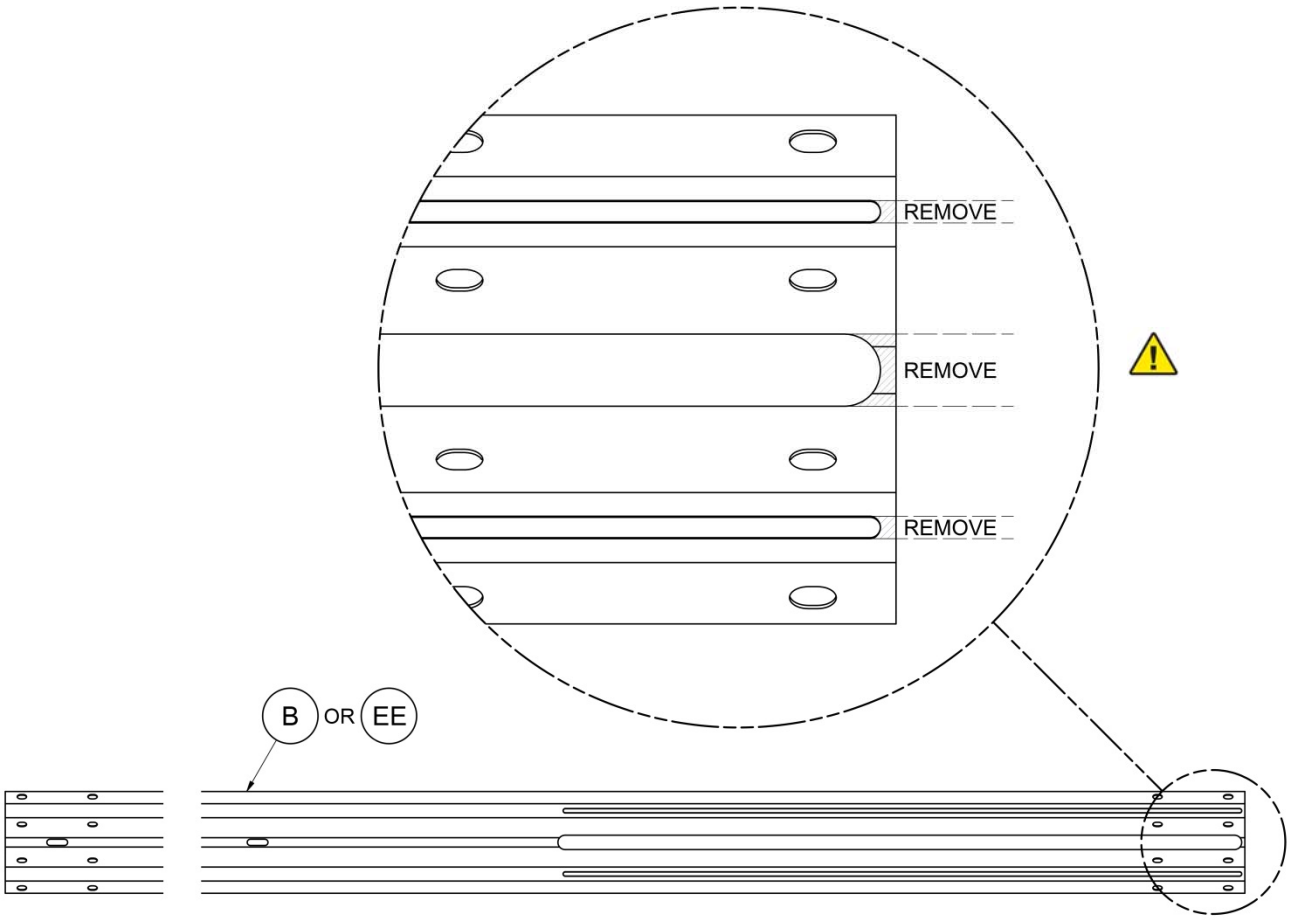

Note: Only one (1) SoftStop® Anchor Rail is used per assembly, 12'-6" (Part B) or 25'-0" (Part EE).

Warning: Keep body parts clear of cutting device. Ensure proper personal protective equipment (PPE) is worn. Failure to follow this warning could result in serious injury or death.

© 2019 Trinity Highway Products, LLC

Step B: Assemble all parts in the configuration and orientation shown below. Flatten the (4) plies of the SoftStop® Anchor Rail together and insert both hex bolts (Part Q) through the bottom side of the four (4) plies of the SoftStop® Anchor Rail (Part B or Part EE) with washers and nuts (Parts W & AA). The bottom side is determined by the final assembled position of the SoftStop® System (nuts are on top side of Anchor Rail). The use of locking pliers or c-clamps will assist the assembly process.

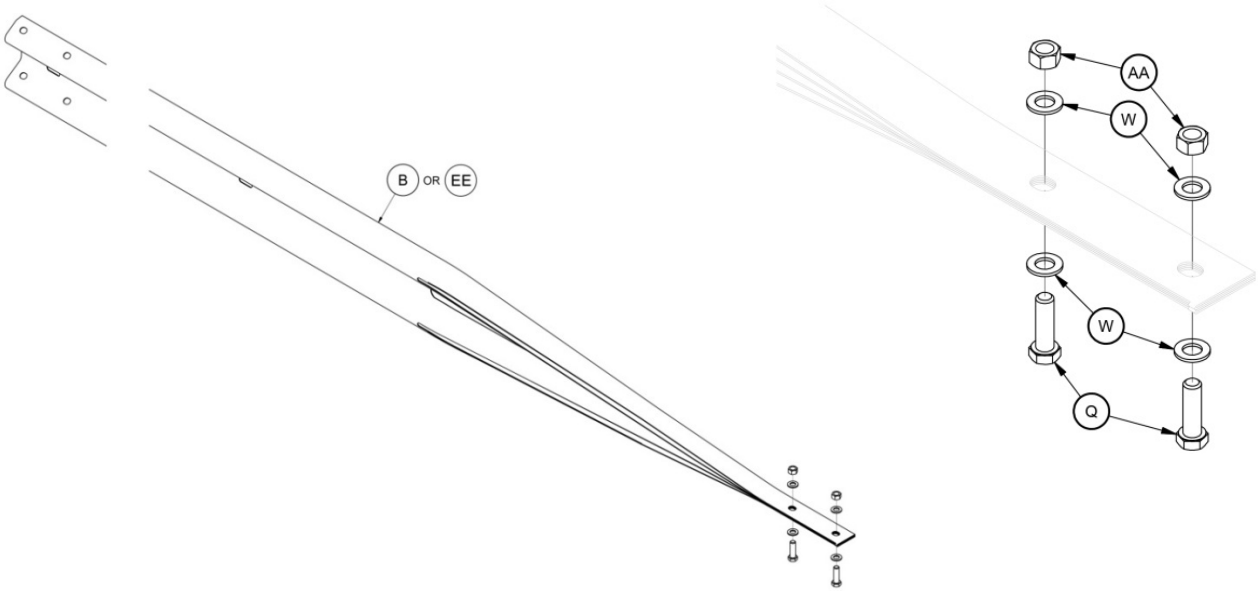

Step C: Feed the flattened slotted end of the SoftStop® Anchor Rail (Part B or Part EE) into the SoftStop® Impact Head (Part A) until approximately 18" [457 mm] of the SoftStop® Anchor Rail is protruding out the Chute of the SoftStop® Impact Head. This can be achieved by the use of a come-a-long or other mechanical means.

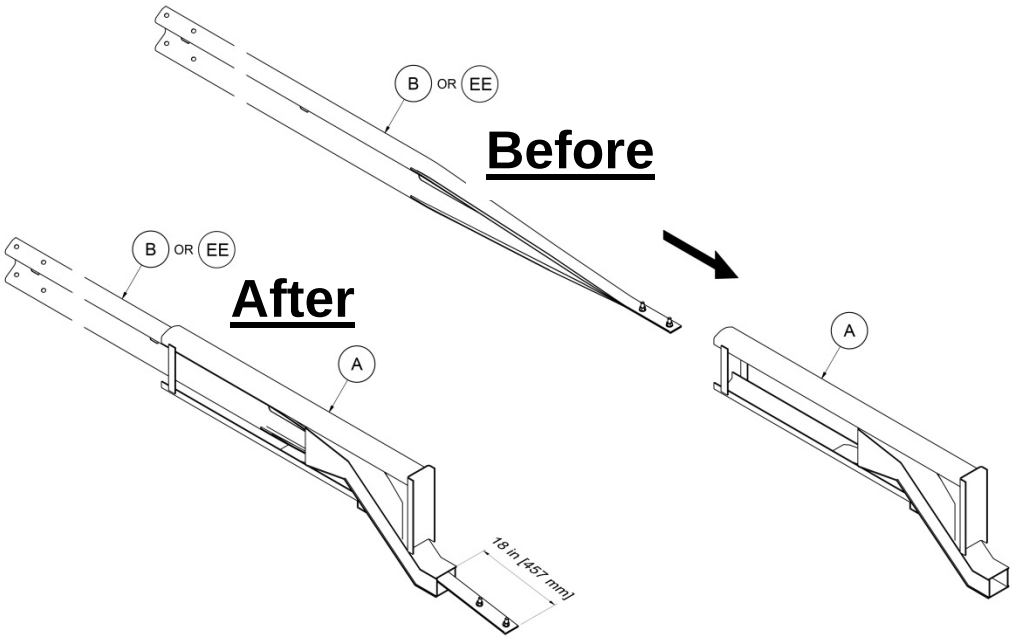

© 2019 Trinity Highway Products, LLC

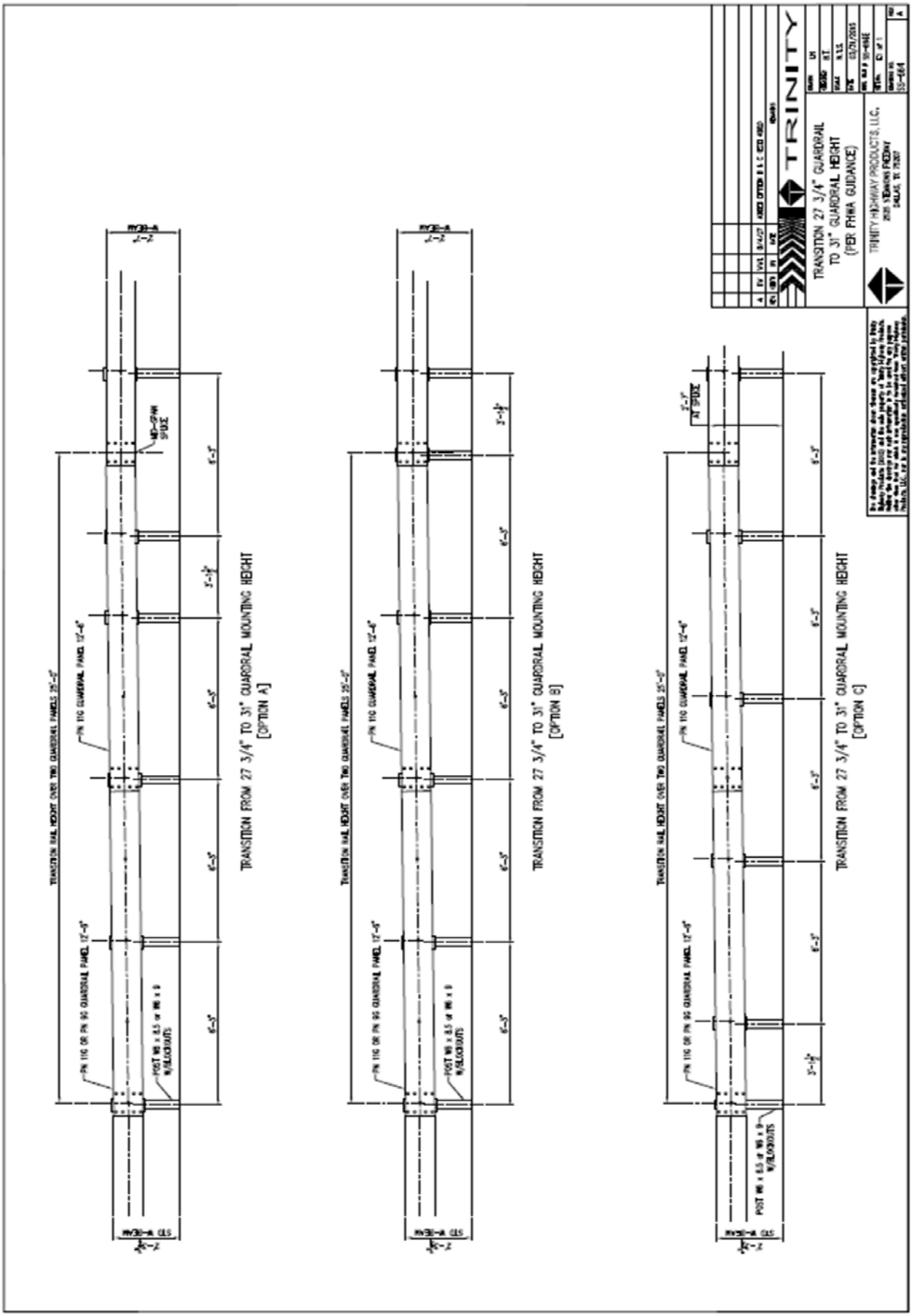

Rail Height Transition (27 3/4" to 31") [705 mm to 787 mm]

© 2019 Trinity Highway Products, LLC

SoftStop® System (Test Level 2) - Post Placement Diagram

For 12” [305 mm] composite Block Assembly

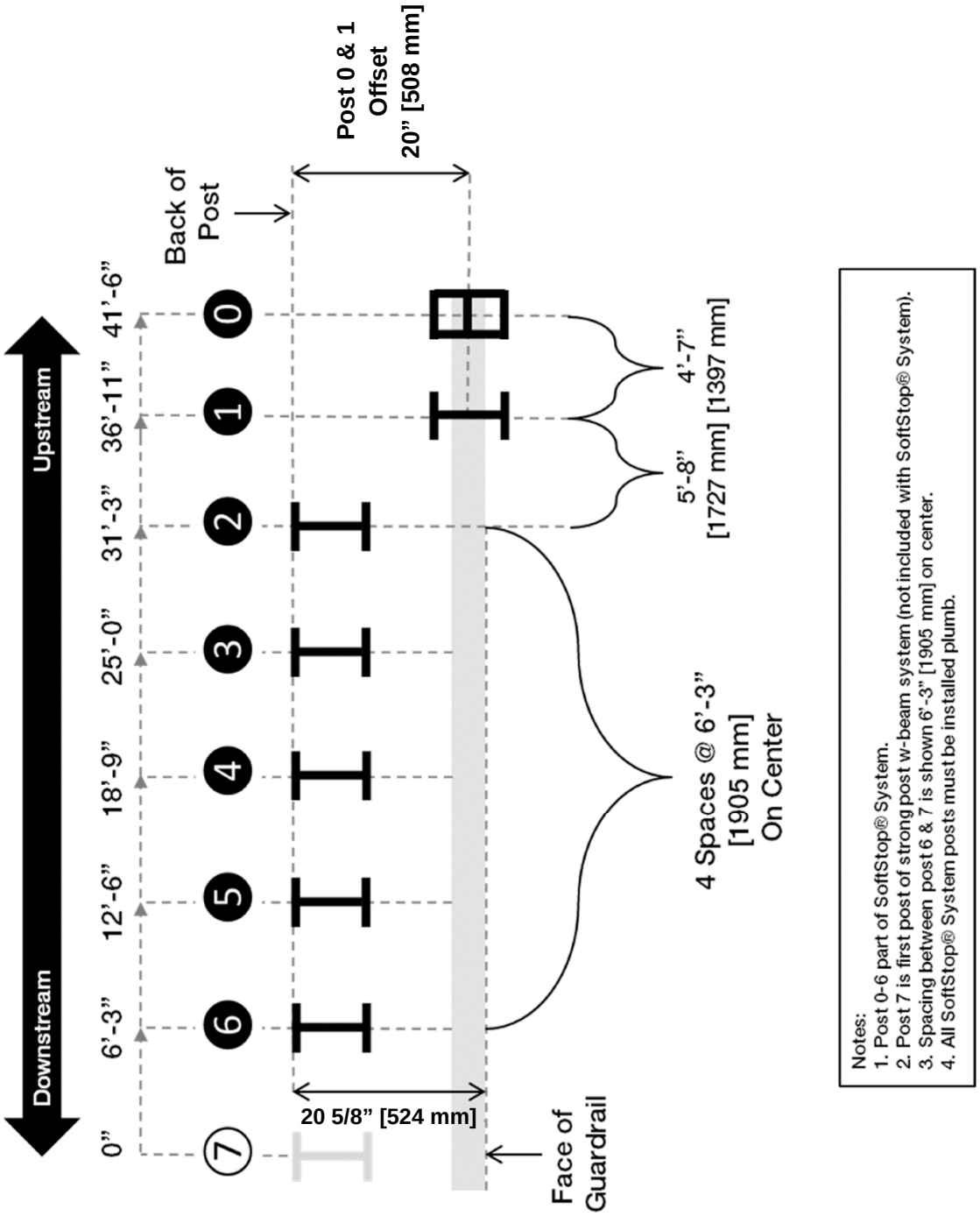

All posts within the SoftStop® System are fabricated from W6x8.5# [W150x13] or W6X9# [W150X13.5] Structural Beam, with the exception of Post #0, which is fabricated from W6x15# [W150x22] Structural Beam.

© 2019 Trinity Highway Products, LLC

SoftStop® System (Test Level 1) - Post Placement Diagram

For 12” [305 mm] composite Block Assembly

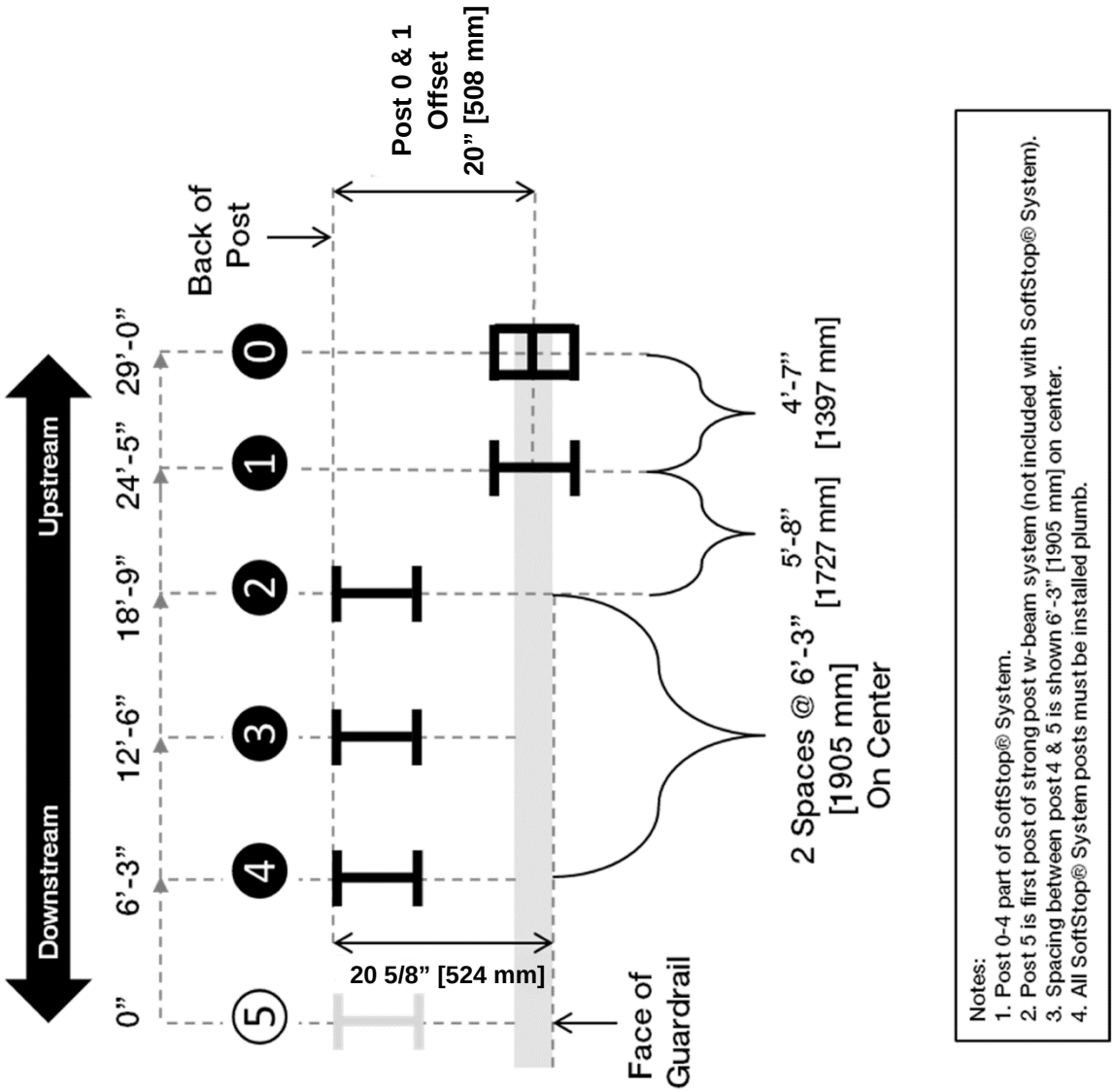

All posts within the SoftStop® System are fabricated from W6x8.5# [W150x13] or W6X9# [W150X13.5] Structural Beam, with the exception of Post #0, which is fabricated from W6x15# [W150x22] Structural Beam.

© 2019 Trinity Highway Products, LLC

SoftStop® Anchor Post (Post 0) Foundation Options

Warning: All options shown below REQUIRE the concrete to cure to a minimum of 2,800 psi [19.3 MPa] PRIOR to attaching the SoftStop® Anchor Rail or in any way moving or loading the SoftStop® Anchor Post (Post 0). See page 21, (including Item C) for additional information on SoftStop® Anchor Post (Post 0) requirements. Failure to follow this warning could result in serious injury or death.

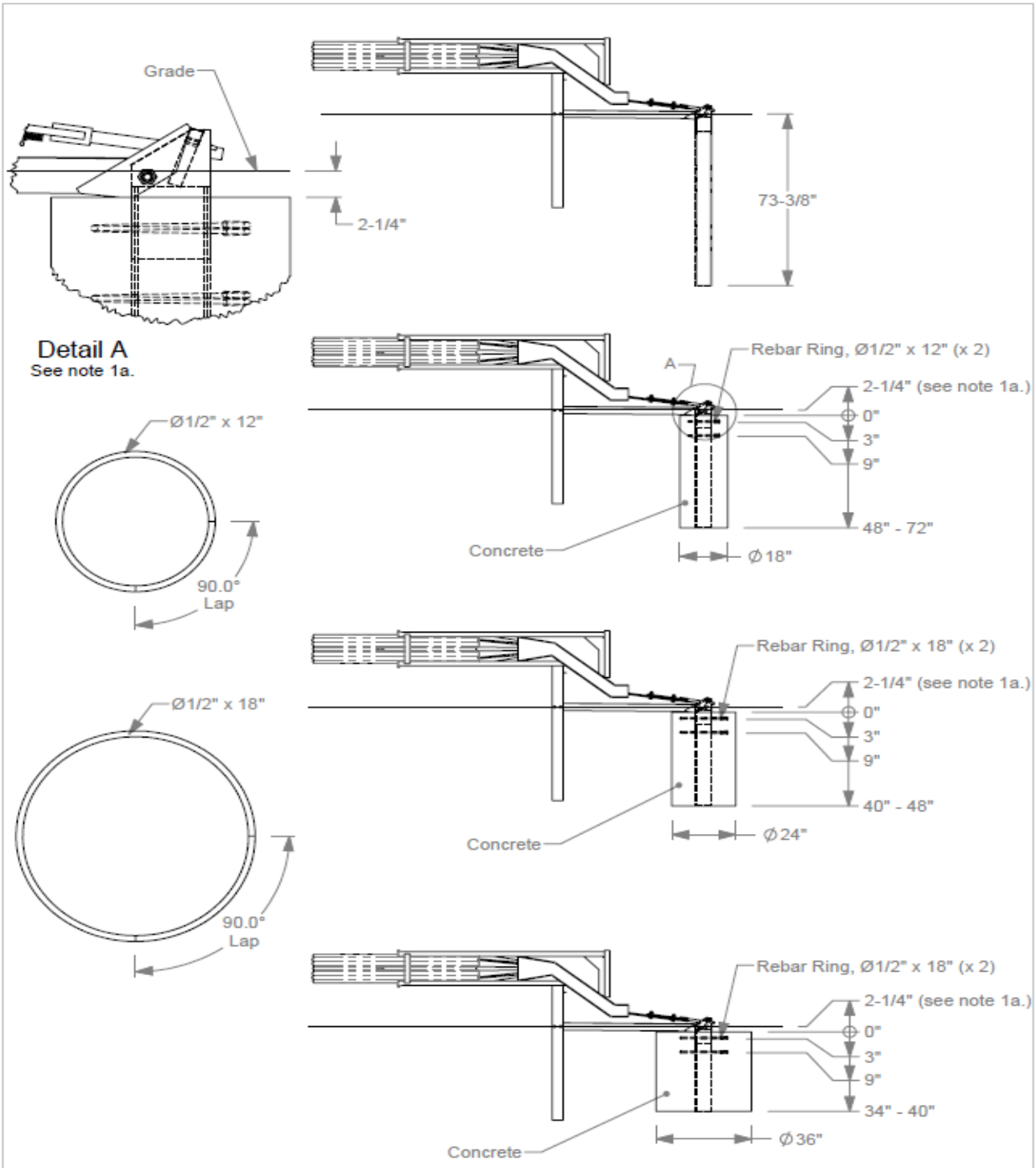

1a. Keep concrete 2-1/4" below grade to avoid conflict with Strut and other components.
1b. All rebar is grade 60

© 2019 Trinity Highway Products, LLC

SoftStop® Repair Kit – 12’-6” [3.81 m] Anchor Panel

“00SOFTSTOPKIT-011”, will contain the following items:

ID	COMPONENT	PN	QTY
A	SoftStop® Impact Head	15208A	1
B	SoftStop® Anchor Rail 12’-6” [3.81 m]	15200G	1
E	SoftStop® SYTP® 4’-9 1/2" [1460 mm]	15203G	1
F	SYTP® Post 6’-0” [1830 mm]	15000G	1
H	12” [305 mm] Composite Offset Block	6740B	1
K	SoftStop® Keeper Plate	15207G	1
T	5/8” x 14” GR Bolt	3540G	1
U	5/8” x 1.25” GR Bolt	3360G	8
BB	5/8” GR Hex Nut	3340G	9
	Delineator Impact Head Sheeting, LEFT and RIGHT	5851B / 5852B	1 SET
➔	**SoftStop® Special Hardware Bag**	**15247G**	**1 SET**
	To Include The Following:		
O	5/16” x 2.5” Hex Bolt	105285G	2
P	5/16” x 1.5” Hex Bolt	105286G	1
Q	3/4" x 2.5” Hex Bolt	3717G	2
R	5/8” x 9” Hex Bolt	4489G	1
S	5/8” x 1.75” Hex Bolt	3391G	1
V	1” Round Washer	4902G	1
W	3/4” Round Washer	3701G	4
X	5/8” Round Washer	4372G	4
Y	5/16” Round Washer Wide	3240G	6
Z	1” Heavy Hex Nut	3908G	1
AA	3/4” Heavy Hex Nut	3704G	2
BB	5/8” GR Hex Nut	3340G	2
CC	5/16” Hex Nut	3245G	3

The SoftStop® Repair Kit (00SOFTSTOPKIT-011) is a general recommendation of “non-standard parts” for a typical repair of a SoftStop® System damaged within the first 12’-6” [3.81 m] of the SoftStop® AND utilizing 12’-6” [3.81 m] SoftStop® Anchor Rail. **This listing/kit is NOT intended to be an exhaustive listing of all parts that may be need for the full repair of an impacted SoftStop® for any specific impact. After an impact occurs, the SoftStop® System must be evaluated and restored to its original specified condition or replaced.** It WILL likely require additional “standard” parts to complete the repair.

Note: The SoftStop® Anchor Post (Post 0), SoftStop® Angle Strut, SoftStop® Anchor Paddle, SoftStop® Plate Washer and the SoftStop® Anchor Angles (2) are NOT included in this kit. The remaining length of the system beyond Post 2 uses System Line Posts, 12” [305 mm] Offset Blocks and System Rail.

© 2019 Trinity Highway Products, LLC

SoftStop® Repair Kit – 25’-0” [7.62 m] Anchor Panel

“00SOFTSTOPKIT-013”, will contain the following items:

ID	COMPONENT	PN	QTY
A	SoftStop® Impact Head	15208A	1
B	SoftStop® Anchor Rail 25’-0” [7.62 m]	15215G	1
E	SoftStop® SYTP® 4’-9 1/2" [1460 mm]	15203G	1
F	SYTP® Post 6’-0” [1830 mm]	15000G	1
G	System Line Post 6’-0” [1830 mm]	533G	2
H	12” [305 mm] Composite Offset Block	6740B	3
K	SoftStop® Keeper Plate	15207G	1
T	5/8” X 14” GR Bolt	3540G	3
U	5/8” x 1.25” GR Bolt	3360G	8
BB	5/8” GR Hex Nut	3340G	11
	Delineator Impact Head Sheeting, LEFT and RIGHT	5851B / 5852B	1 SET
➔	**SoftStop® Special Hardware Bag**	**15247G**	**1 SET**
	To Include The Following:		
O	5/16” x 2.5” Hex Bolt	105285G	2
P	5/16” x 1.5” Hex Bolt	105286G	1
Q	3/4" x 2.5” Hex Bolt	3717G	2
R	5/8” x 9” Hex Bolt	4489G	1
S	5/8” x 1.75” Hex Bolt	3391G	1
V	1” Round Washer	4902G	1
W	3/4” Round Washer	3701G	4
X	5/8” Round Washer	4372G	4
Y	5/16” Round Washer Wide	3240G	6
Z	1” Heavy Hex Nut	3908G	1
AA	3/4” Heavy Hex Nut	3704G	2
BB	5/8” GR Hex Nut	3340G	2
CC	5/16” Hex Nut	3245G	3

The SoftStop® Repair Kit (00SOFTSTOPKIT-013) is a general recommendation of “non-standard parts” for a typical repair of a SoftStop® System damaged within the first 25’-0” [7.62 m] of the SoftStop® AND utilizing 25’-0” [7.62 m] SoftStop® Anchor Rail. **This listing/kit is NOT intended to be an exhaustive listing of all parts that may be need for the full repair of an impacted SoftStop® for any specific impact. After an impact occurs, the SoftStop® System must be evaluated and restored to its original specified condition or replaced.** It WILL likely require additional “standard” parts to complete the repair.

Note: The SoftStop® Anchor Post (Post 0), SoftStop® Angle Strut, SoftStop® Anchor Paddle, SoftStop® Plate Washer and the SoftStop® Anchor Angles (2) are NOT included in this kit. The remaining length of the system beyond Post 4 uses System Line Posts, 12” [305 mm] Offset Blocks and System Rail.

© 2019 Trinity Highway Products, LLC

TRINITY HIGHWAY

Ahead of the Curve®

For more complete information on Trinity Highway products and services, visit us on the web at www.trinityhighway.com. Materials and specifications are subject to change without notice. Please contact Trinity Highway to confirm that you are referring to the most current instructions.

www.trinityhighway.com

888.323.6374 (USA) **+1 214.589.8140 (International)**